SCOTTISH QUALIFICATIONS AUTHORITY

2004 Electronic and Electrical Fundamentals

Intermediate 2

Finalised Marking Instructions

Marks

Section A

Attempt all the questions in this section (50 marks)

1. Convert the following numbers.

(*a*) Hexadecimal to decimal $7F_{16}$

(*b*) Binary to decimal 11010110_2

(*c*) Hexadecimal to binary $B7_{16}$

ANSWERS

(*a*) $\mathbf{127_{10}}$ **2**

(*b*) $\mathbf{214_{10}}$ **2**

(*c*) $\mathbf{10110111_2}$ **2**

(6)

2. With reference to Figures Q2(*a*) and (*b*), identify the components shown and state one application for each.

(*a*)

Figure Q2(*a*)

(*b*)

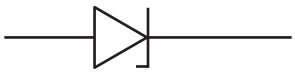

Figure Q2(*b*)

ANSWERS

(*a*) **Diode, Rectification** **1, 1**

(*b*) **Zener Diode, Voltage stabilisation** **1, 1**

(4)

Marks

3. For each of the gates given below determine the logic outputs X, Y and Z.

(*a*) 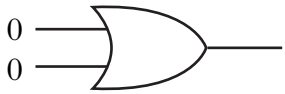

(X)

(*b*) 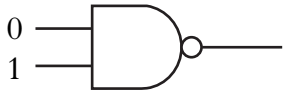

(Y)

(*c*) 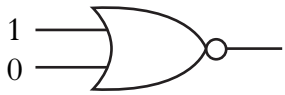

(Z)

ANSWERS

(*a*) 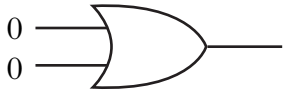

(X) **Z = 0** **1**

(*b*) 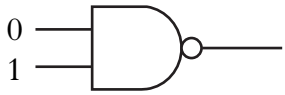

(Y) **Z = 1** **2**

(*c*) 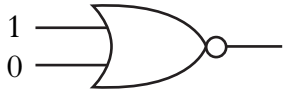

(Z) **Z = 0** **2**

(5)

4. (*a*) State **two** of the factors that determine the magnitude (size) and direction of the force on a current carrying conductor when it is at right angles to a uniform magnetic field.

(*b*) An emf of 56 volts is generated when a conductor is moving at 10 m s^{-1} and at right angles to a magnetic field of 0·35 T. Calculate the length of the conductor within the magnetic field.

ANSWERS

(*a*) Any two
Magnetic field strength, current, direction of the magnetic field **2**

(*b*) $\boldsymbol{E = BLv}$ **1**

$\boldsymbol{L = \frac{E}{Bv}}$ **1**

$= 56/(10 \times 0{\cdot}35) = 56/3{\cdot}5 =$ **16 m** **1**

(5)

Marks

5.

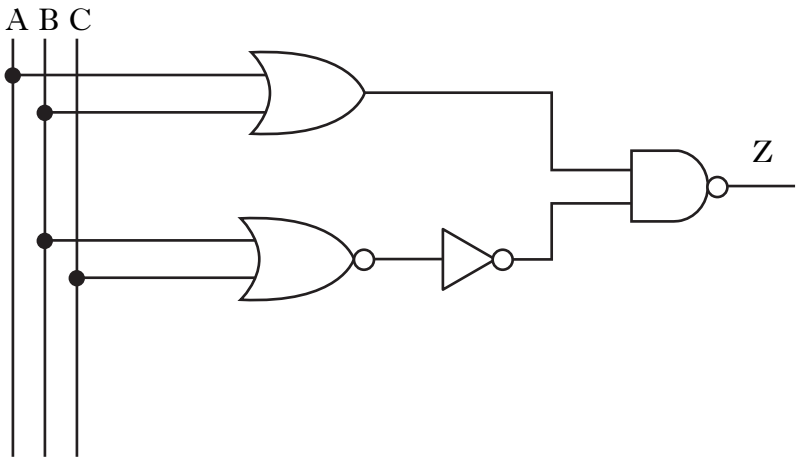

Figure Q5

For the circuit shown in Figure Q5:

(*a*) determine from the logic diagram the Boolean expression for the circuit;

(*b*) draw the truth table for the circuit.

ANSWERS

(*a*) **$Z = \overline{(A+B) \,.\, (B+C)}$** **2**

(*b*)

A	B	C	A+B	B+C	(A+B).(B+C)	Z
0	0	0	0	0	0	1
0	0	1	0	1	0	1
0	1	0	1	1	1	0
0	1	1	1	1	1	0
1	0	0	1	0	0	1
1	0	1	1	1	1	0
1	1	0	1	1	1	0
1	1	1	1	1	1	0

4

(6)

Marks

6. (*a*) In **Worksheet Q6(*a*)** complete the boxes stating whether the ring material is magnetic or non-magnetic.

(i)

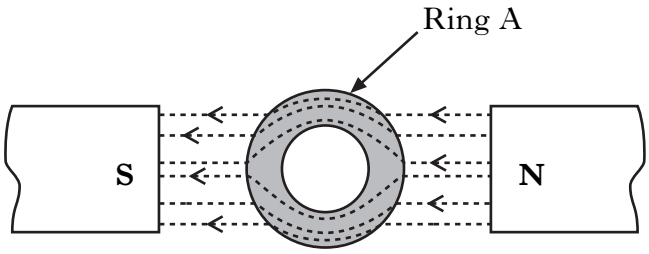

(ii)

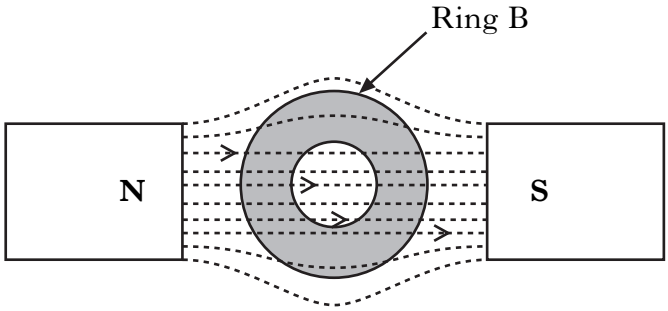

(*b*) (i) State **one** type of magnetic material.

(ii) State **one** type of non-magnetic material.

ANSWERS

(*a*) (i) **Magnetic** **1**

(ii) **Non-magnetic** **1**

(*b*) (i) Magnetic **(Iron, Steel)** **1**

(ii) Non-magnetic **(Copper, Brass)** **1**

(4)

Marks

7.

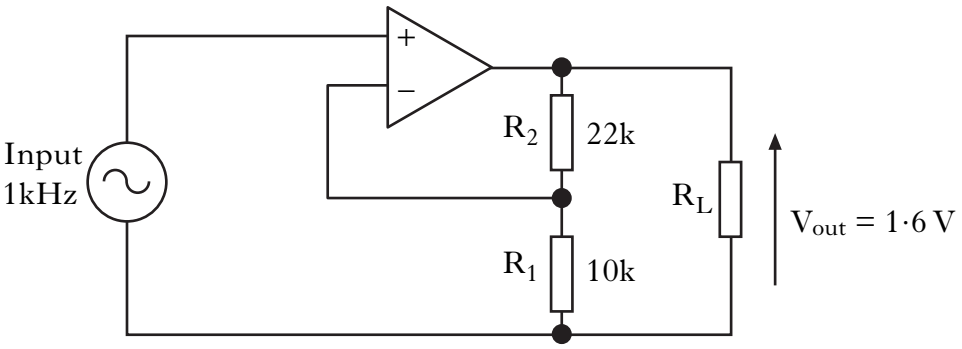

Figure Q7

The circuit shown in Figure Q7 gives one possible circuit configuration using an operational amplifier. The supply voltages of ±15 V are not shown.

(*a*) Name the circuit configuration shown in Figure Q7.

(*b*) Calculate the gain of the circuit.

(*c*) Calculate the input voltage of the circuit.

ANSWERS

(*a*) **Non inverting amplifier** **1**

(*b*) Gain = (R1 + R2)/R1 = (22 + 10)/10 = 32/10 **= 3·2** **2**

(*c*) $V_{in} = V_{out}$/gain = 1·6/3·2 **= 0·5 V or 500 mV** **2**

(5)

Marks

8. The thyristor characteristic shown in Figure Q8 has the five operational regions indicated by arrows and numbers. The operational regions are:

- forward conduction
- forward blocking
- forward breakdown
- reverse breakdown
- reverse blocking.

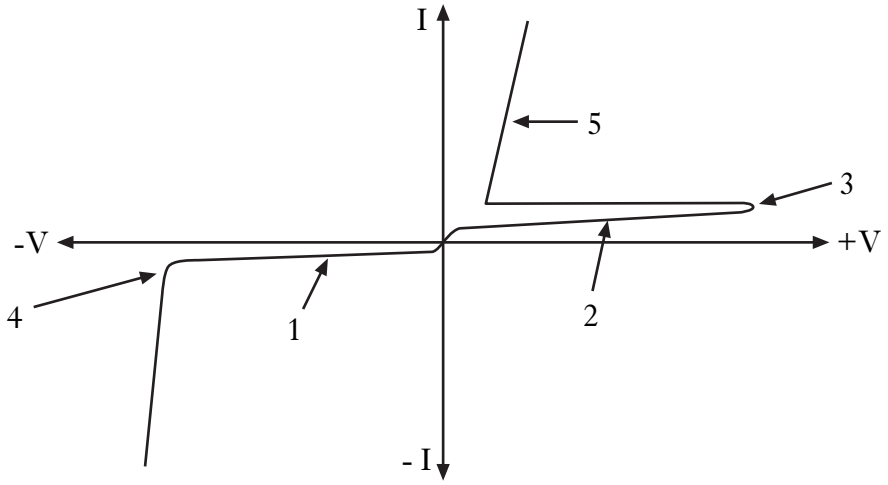

Figure Q8

State the operational regions indicated by the following arrows:

(*a*) Arrow 1;

(*b*) Arrow 2;

(*c*) Arrow 3;

(*d*) Arrow 4;

(*e*) Arrow 5.

ANSWERS

(*a*)	Arrow 1;	= **Reverse blocking**	**1**
(*b*)	Arrow 2;	= **Forward blocking**	**1**
(*c*)	Arrow 3;	= **Forward breakdown**	**1**
(*d*)	Arrow 4;	= **Reverse breakdown**	**1**
(*e*)	Arrow 5.	= **Forward conducting**	**1**
			(5)

Marks

9.

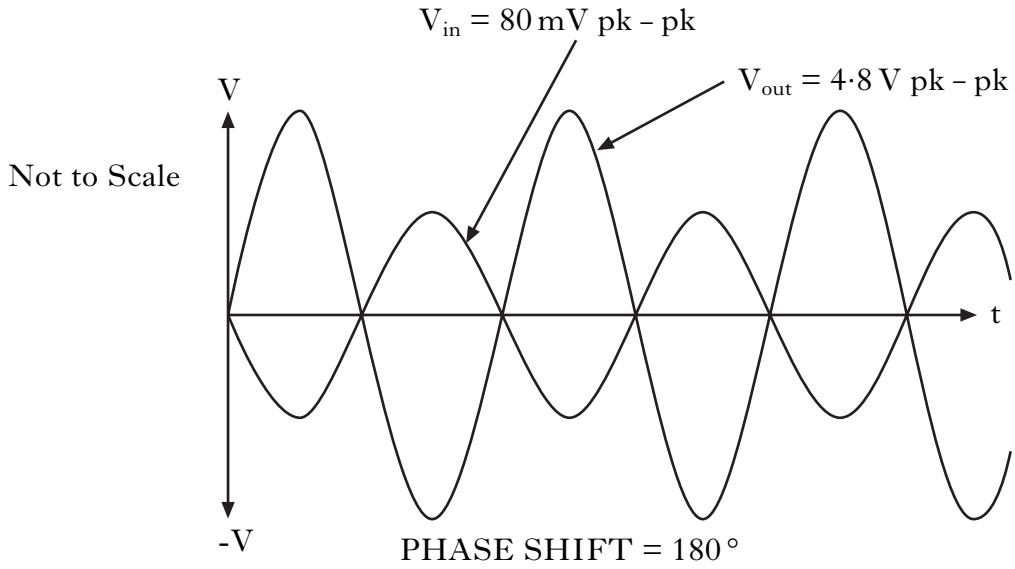

Figure Q9

Figure Q9 shows the input and output waveforms of an amplifier circuit.

(*a*) Calculate the gain of the circuit.

(*b*) State whether the amplifier is inverting or non inverting and explain your answer.

ANSWERS

(*a*) Gain = $\mathbf{V_{out}/V_{in}}$ = 4·8/0·08 = **–60** **1, 1**

(*b*) **Inverting amplifier, output is 180º out of phase with input (inverted)** **2**

(4)

Marks

10.

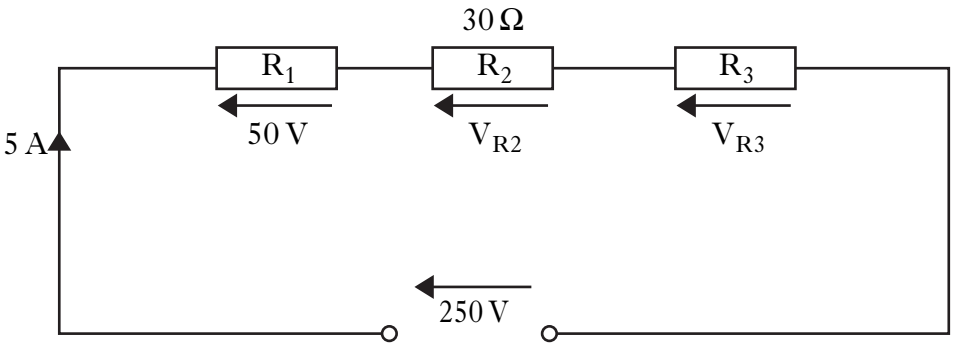

Figure Q10

In the d.c. network shown in Figure Q10 calculate:

(*a*) the total circuit resistance;

(*b*) the resistance of component R_1;

(*c*) the potential difference across the resistor R_2;

(*d*) the potential difference across the resistor R_3;

(*e*) the resistance of component R_3.

ANSWERS

(*a*) $R_T = V_S/I_S = 250/5 = \mathbf{50\,\Omega}$ **1**

(*b*) $R_1 = V_{R1}/I = 50/5 = \mathbf{10\,\Omega}$ **1**

(*c*) $V_{R2} = I_S \times R_2 = 5 \times 30 = \mathbf{150\,V}$ **1**

(*d*) $V_{R3} = V_S - (V_{R1} + V_{R2}) = 250 - (50 + 150) = 250 - 200 = \mathbf{50\,V}$ **2**

OR

$R_3 = R_T - (R_1 + R_2) = 50 - (10 + 30) = 50 - 10 = 10\,\Omega$

Hence $V_{R3} = I_S \times R_3 = 5 \times 10 = \mathbf{50\,V}$

(*e*) $R_3 = R_T - (R_1 + R_2) = 50 - (10 + 30) = 50 - 10 = \mathbf{10\,\Omega}$ **1**

OR **(6)**

$R_3 = V_{R3}/I_S = 50/5 = \mathbf{10\,\Omega}$

Section B

Attempt any TWO questions in this section (50 marks).
Each question is worth 25 marks.

11. (*a*) Add the following binary numbers.

(i) $1011_2 + 0101_2$ **1**

(ii) $1010_2 + 1011_2$ **1**

(*b*) Draw, using ANSI symbols, the logic diagrams for the following Boolean Expressions.

(i) $F = \overline{(A + B + C) \,.\, (\overline{A} + \overline{B} + C)}$ **3**

(ii) $F = \overline{(R \,.\, \overline{S} \,.\, T)} + (\overline{R} \,.\, S \,.\, T)$ **3**

(*c*) Using **Worksheet Q11(*c*)**:

(i) determine the output of gates G1 to G7 for the given input conditions and record each gate output in the table on the worksheet; **7**

(ii) state **one** type of gate that could be used to replace G6 without changing the logic function of the circuit. **1**

(*d*) Refer to the circuit shown in Figure Q11(*d*).

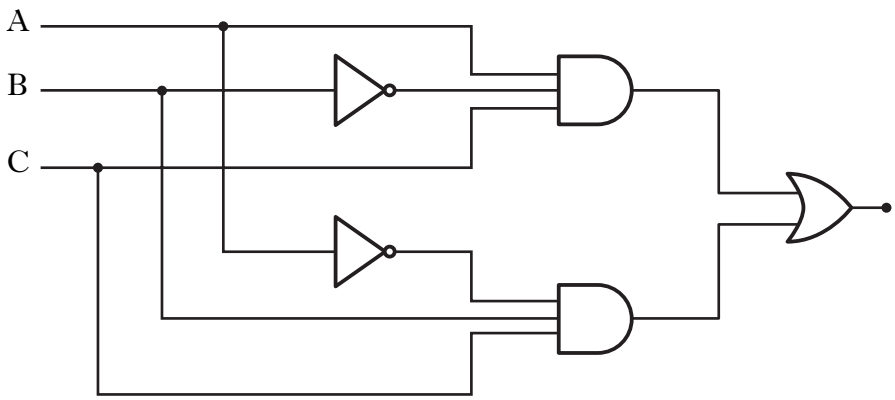

Figure Q11(*d*)

(i) Determine the Boolean expression for the circuit. **2**

(ii) Construct the truth table. **2**

(iii) Due to a fault condition, the output of each NOT gate is permanently at a logic 1. Construct a truth table for the circuit to include the fault. **5**

(25)

11. (continued)

ANSWERS

(*a*) (i) 10000_2 **1**

(ii) 10101_2 **1**

(*b*) (i) **3**

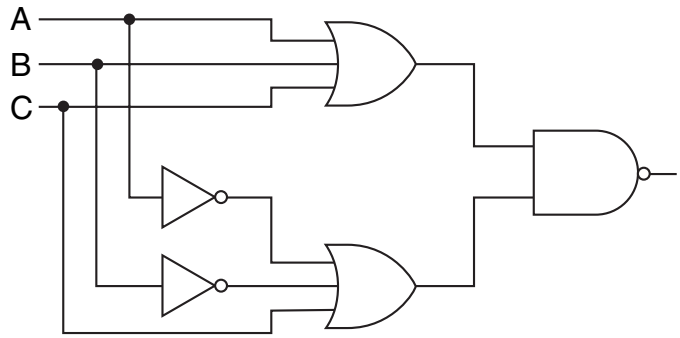

(ii) **3**

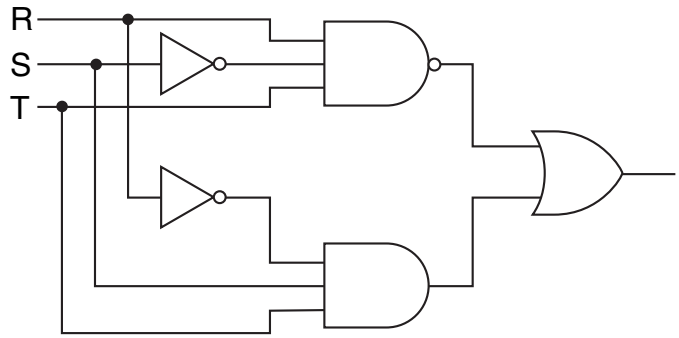

(*c*) (i)

Gate	G1	G2	G3	G4	G5	G6	G7
Gate Output	0	1	0	1	1	0	0

7

(ii) NOT gate, NOR with inputs tied together **1**

(*d*) (i) $F = A.\overline{B}.C + \overline{A}.B.C$ **2**

(ii) and (iii) **2**

5

(25)

					1	2	**1+2**			3	4	**3+4**
A	**B**	**C**	$\overline{A}$	$\overline{B}$	$A.\overline{B}.C$	$\overline{A}.B.C$	**F(d)(ii)**	$\overline{A}$=1	$\overline{B}$=1	$\overline{A}.B.C$	$A.\overline{B}.C$	**F(*d*)(iii)**
0	**0**	**0**	1	1	0	0	**0**	1	1	0	0	**0**
0	**0**	**1**	1	1	0	0	**0**	1	1	0	0	**0**
0	**1**	**0**	1	0	0	0	**0**	1	1	0	0	**0**
0	**1**	**1**	1	0	0	1	**1**	1	1	1	0	**1**
1	**0**	**0**	0	1	0	0	**0**	1	1	0	0	**0**
1	**0**	**1**	0	1	1	0	**1**	1	1	0	1	**1**
1	**1**	**0**	0	0	0	0	**0**	1	1	0	0	**0**
1	**1**	**1**	0	0	0	0	**0**	1	1	1	1	**1**

12. (*a*) *Marks*

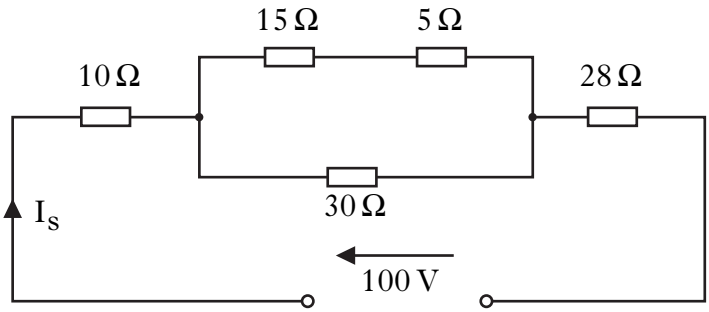

Figure Q12(*a*)

For the circuit shown in Figure Q12(*a*), calculate:

(i) the total circuit resistance; **3**

(ii) the supply current I_S; **1**

(iii) the total power dissipated; **2**

(iv) the voltage across the 30 Ω resistor; **3**

(v) the current through the 5 Ω resistor; **3**

(vi) the total energy consumed in joules if the circuit is on for 30 minutes. **2**

(*b*) The coil B shown in Figure Q12(*b*) rotates at a constant speed of $10\ \text{m s}^{-1}$ through a magnetic field with a flux density of 0·4 T. The coil has an effective length of 1·2 m.

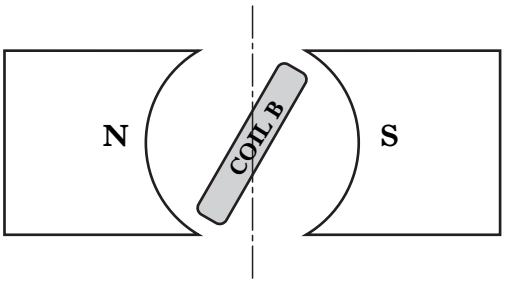

Figure Q12(*b*)

(i) Calculate the maximum value of the induced voltage. **2**

(ii) State the angle relative to the vertical at which the minimum voltage will occur. **1**

(iii) Calculate the induced emf when the coil cuts the field at an angle of 60° relative to the vertical. **2**

(iv) Calculate the rms value of the induced voltage. **2**

12. (continued)

(*c*) Figure Q12(*c*) shows a current carrying conductor placed between the poles of a magnet.

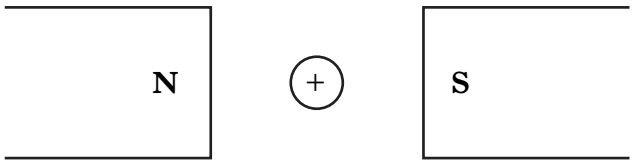

Figure Q12(*c*)

(i) If the current doubles, by how much does the force on the conductor change? **2**

(ii) If the current direction changes, what happens to:

(A) the size of the force; **1**

(B) the direction of the force? **1**

(25)

Marks

12. (continued)

ANSWERS

(*a*) (i) $R_{\text{parallel}} = \dfrac{(15+5)\times 30}{15+5+30} = \dfrac{600}{50} = 12\ \Omega$ **2**

$R_{\text{total}} = 10 + 12 + 28 = 50\,\Omega$ **1**

(ii) $I_S = \dfrac{V_S}{R_t} = \dfrac{100}{50} = 2\text{A}$ **1**

(iii) $P = VI = 100 \times 2 =$ **200 watts** **2**

(iv) $V_{30\,\Omega} = V_{\text{parallel}} = I_S \times R_{\text{parallel}} = 2 \times 12 =$ **24 volts** **3**

(v) $I_{5\,\Omega} = I_{20\,\Omega} = V_{\text{parallel}}/R = 24/20 =$ **1·2 A** **3**

(vi) $W = P \times t = 200 \times 30 \times 60 =$ **360,000 Joules** **2**

(*b*) (i) $E_{max} = BLv = 0{\cdot}4 \times 1{\cdot}2 \times 10 =$ **4·8 volts** **2**

(ii) minimum voltage occurs at **0° or 180°** **1**

(iii) $e = E_{max} \sin 60 = 4{\cdot}8 \times 0{\cdot}866 =$ **4·16 volts** **2**

(iv) $e_{rms} = 0{\cdot}707 \times E_{max} = 0{\cdot}707 \times 4{\cdot}8 =$ **3·39 volts** **2**

(*c*) (i) the force on the conductor doubles **2**

(ii) (A) size – no change **1**

(B) direction – opposite to change **1**

(25)

Marks

13. (*a*)

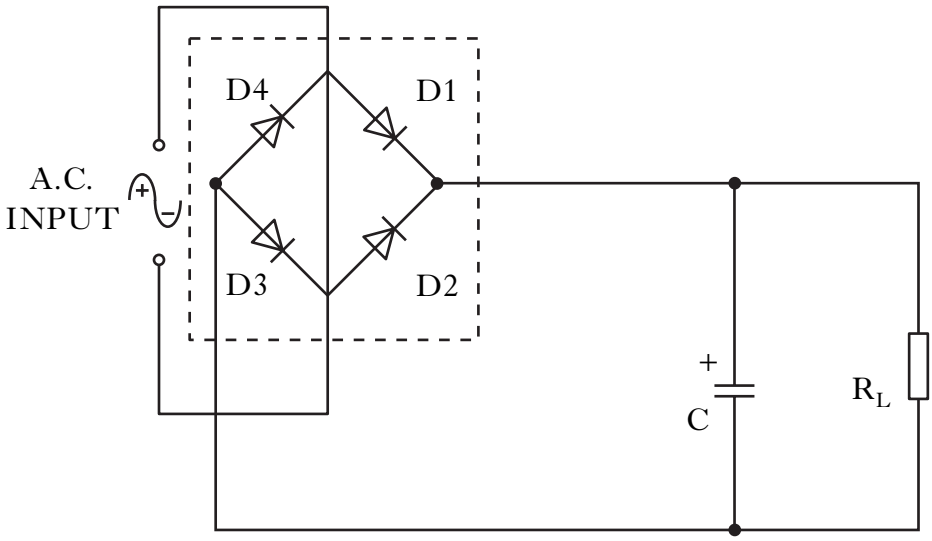

Figure Q13(*a*)

(i) Name the circuit shown within the dotted box in Figure Q13(*a*). **1**

(ii) State what diodes are conducting during the positive half-cycle. **2**

(iii) State what diodes are conducting during the negative half-cycle. **2**

(iv) Explain why the voltage polarity across R_L is the same for both half-cycles. **2**

(v) Explain why the capacitor is used in this circuit. **2**

13. (continued)

Marks

(*b*)

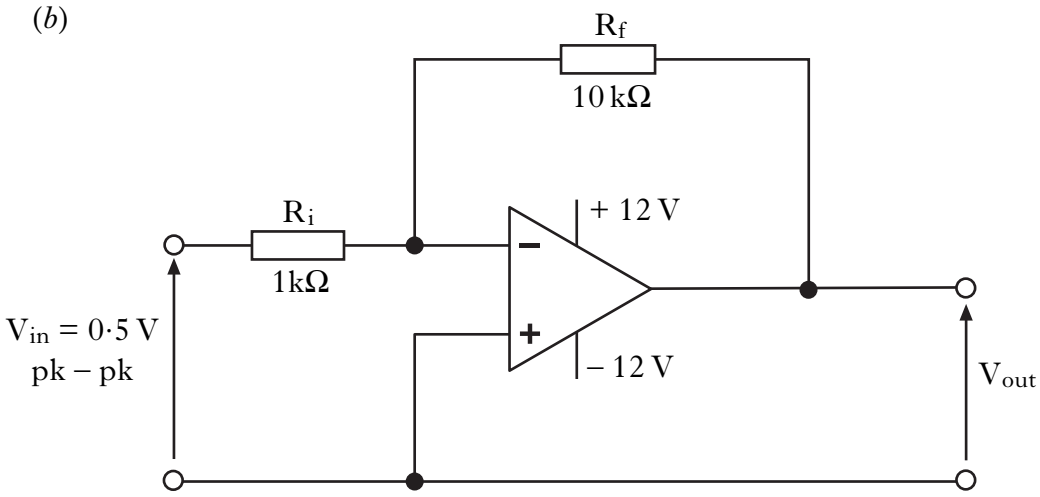

Figure Q13(*b*)

For the circuit shown in Figure Q13(*b*):

(i) calculate the gain; **1**

(ii) calculate the magnitude (size) of the output voltage; **1**

(iii) calculate, for the same input voltage, the new value of R_f to give an output voltage of 4 V pk – pk; **3**

(iv) explain why the output is saturated if the feedback resistor R_f is replaced by a 100 kΩ resistor. **2**

13. (continued)

Marks

(*c*)

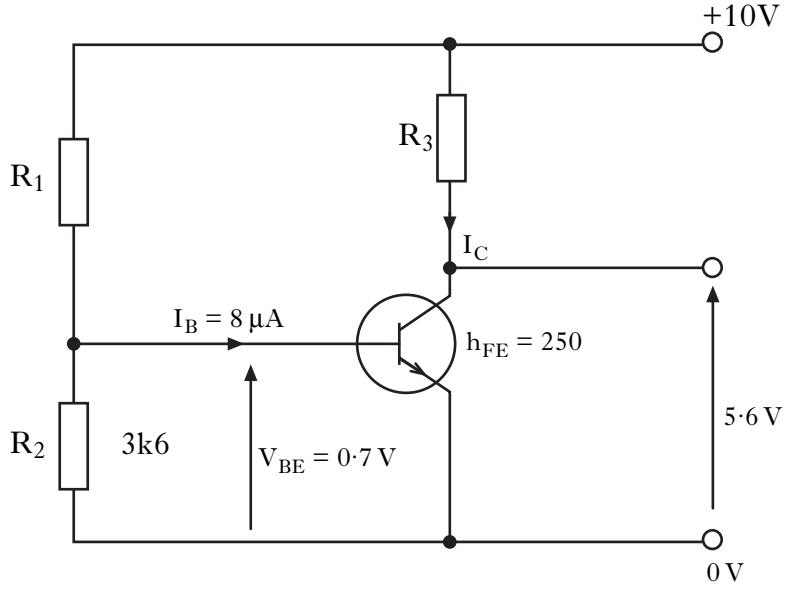

Figure Q13(*c*)

For the transistor circuit shown in Figure Q13(*c*), calculate:

(i) the voltage across R_3; **1**

(ii) the value of resistor R_3; **4**

(iii) the current through R_2; **1**

(iv) the value of resistor R_1. **3**

(25)

Marks

13. (continued)

ANSWERS

(*a*)	(i)	Bridge rectifier	**1**
	(ii)	D1 and D3	**2**
	(iii)	D2 and D4	**2**
	(iv)	Current direction is the same	**2**
	(v)	To maintain voltage across R_L when supply voltage falls and diodes not conducting	**2**
(*b*)	(i)	–10	**1**
	(ii)	5 V pk-pk	**1**
	(iii)	Gain = 4/0·5 = **8** R_f = 8/1 = **8 kΩ**	**3**
	(iv)	Gain too large and output limited by dc supply value	**2**
(*c*)	(i)	V_{R3} = 10 – 5·6 = **4·4 volts**	**1**
	(ii)	Ic = 250 × 0·000008 = **2 mA** R_3 = 4·4/2 mA = **2200 Ω**	**4**
	(iii)	I_{R2} = 0·7/3600 = **194·4 μA**	**1**
	(iv)	R_1 = (10 – 0·7)/(194·4 + 8) = **45·9 kΩ**	**3**
			(25)

[*END OF MARKING INSTRUCTIONS*]