SCOTTISH
QUALIFICATIONS
AUTHORITY

2005 Graphic Communication

Standard Grade – Credit

Finalised Marking Instructions

These Marking Instructions have been prepared by Examination Teams for use by SQA Appointed Markers when marking External Course Assessments.

2005 Graphic Communication
Standard Grade – Credit

1.	(a)	Oblique Circles are drawn as circles and not ellipses	**KI 2**
	(b)	2 – point perspective. Perspective	**KI 1**
	(c)	Gives a realistic impression of what the object will look like from your spectator point.	**KI 1**
	(d)	The further away objects are, then the smaller they will be as they get nearer to the vanishing points.	**KI 1**
	(e)	Isometric Planometric.	**KI 2**
	(f)	To give all required information, including all dimensions, which allow production of the new design.	**KI 1**
	(g)	Drawing is full size.	**KI 1**
			Total KI 9
2.	(a)	2 & 5	**KI 2**
	(b)	9 & 11	**KI 2**
			Total KI 4
3.	(a)	Layering – Drawing different aspects or parts of a drawing on separate layers. These can be viewed separately or together. Any sensible example ie Building drawing with walls, dimensions, electrics and plumbing, all drawn on separate layers.	**KI 2**
	(b)	Surface rendered Surface model Wire frame Solid **<u>NOT Rendered model</u>**	**KI 2**
	(c)	Easier to edit/easier to store/easier to transport	**KI 2**
	(d)	CAD Package DTP Package	**KI 2**
	(e)	Paper moves in one axis, pen moves in the other.	**KI 1**
			Total KI 9

4.	1.	Fillet/arc/ trim round	2.	Zoom/scale/ magnify	3.	Polar array/ring array/radial copy/circular pattern/array	
	4.	Chamfer	5.	Dimension	6.	Mirror image	
	7.	Trim/break	8.	Ellipse	9.	Rotate	
	10.	Circle	11.	Hatch/pattern fill	12.	Copy	**Total KI 12**

5. (a) 3 **KI 1**

(b) So as to make the drawings easy to read, as everyone uses the same conventions. This means there should be no confusion caused by not being able to understand the used conventions. Standardisation of conventions. **KI 1**

(c) **KI 1**

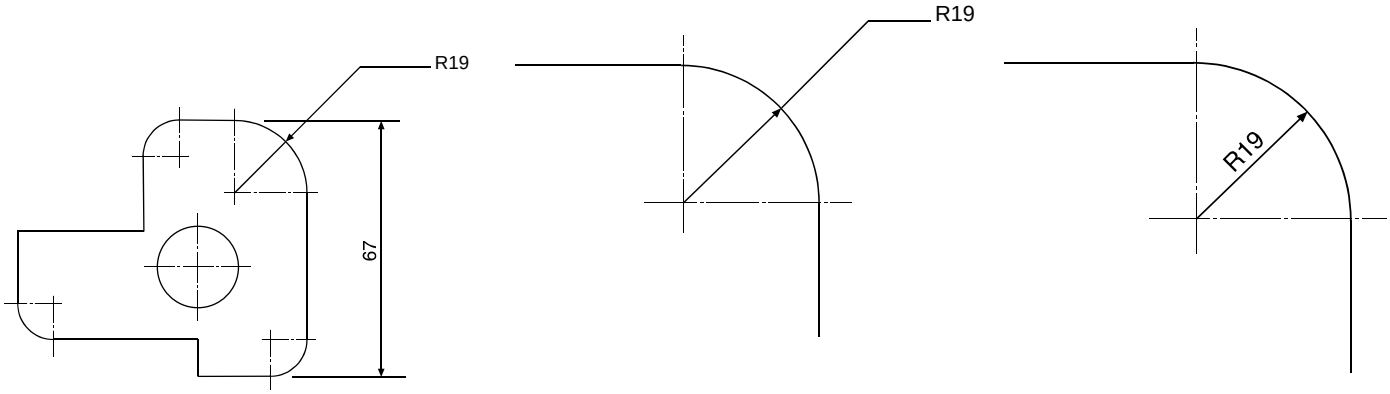

KI 4

One mark for correct dimension.
One mark for the correct convention being used. **Total KI 6**
NB Projection line, dimension line and direction of text must be correct for the mark to be awarded.

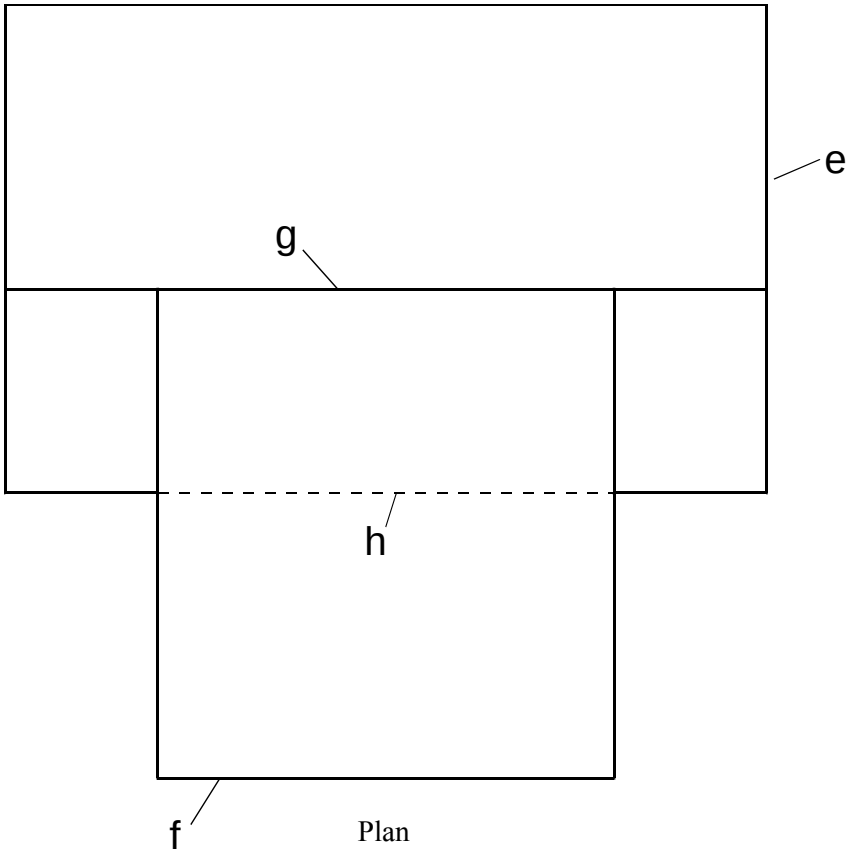

Plan

Elevation

6.	(a)	Rectangle 100 x 60	**1**
	(b)	Step	**1**
	(c)	Paper tray 60 x 30 + position	**1**
	(d)	Split lines (2 lines)	**1**

Plan

6.	(e)	Rectangle 100 x 60	**1**
	(f)	Paper tray 60 x 60	**1**
	(g)	Step line	**1**
	(h)	Hidden detail	**1**

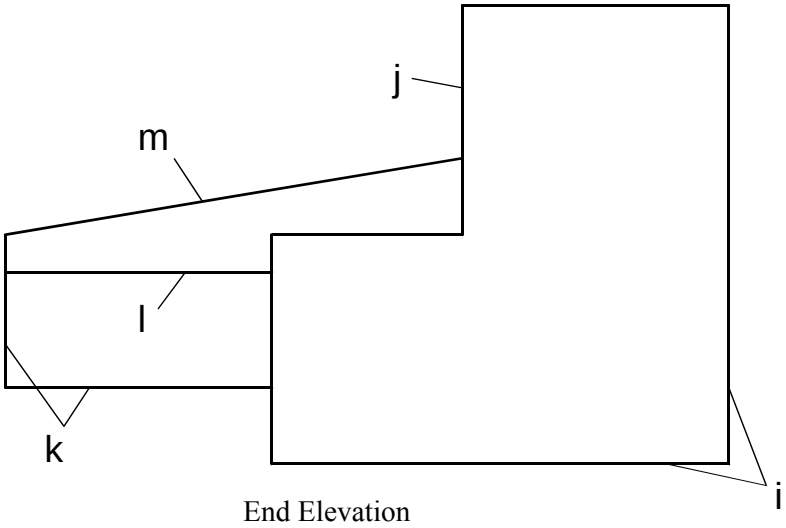

End Elevation

End Elevation

6.	(i)	End (l&b)	**1**
	(j)	Step 25 x 30	**1**
	(k)	Paper tray (l&h)	**1**
	(l)	Split line	**1**
	(m)	Sloping line	**1**
	(n)	Correct projection (3rd angle – all views)	**1**

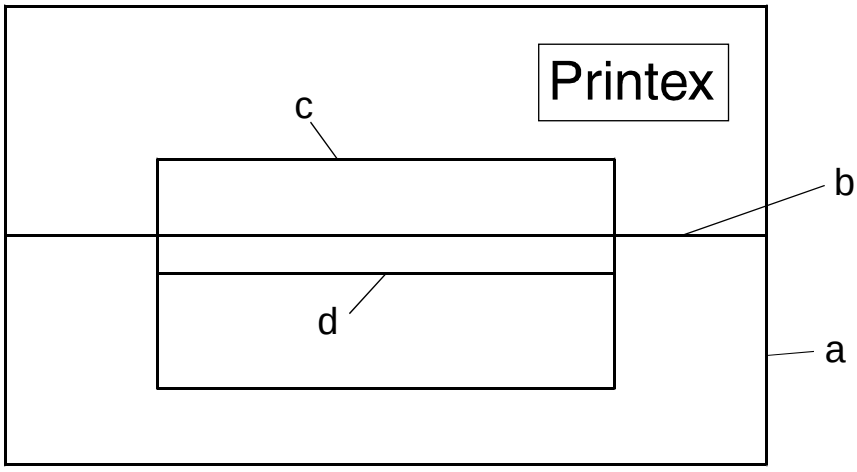

Elevation

End Elevation

7.	(a)	Div. on plan (generators)	**1**
	(b)	Project div elevation	**1**
	(c)	Project div. end ele.	**1**
	(d)	Cone before cut (width)	**1**
	(e)	est. curve points (8 for 1)	**2**
	(f)	Good freehand curve	**1**
	(g)	Cone sides (outline)	**1**

True Shape

7.	(h)	Projection at 90 deg to cut	**1**
	(i)	Est points of curve (4 from 1)	**2**
	(j)	Good freehand curve	**1**

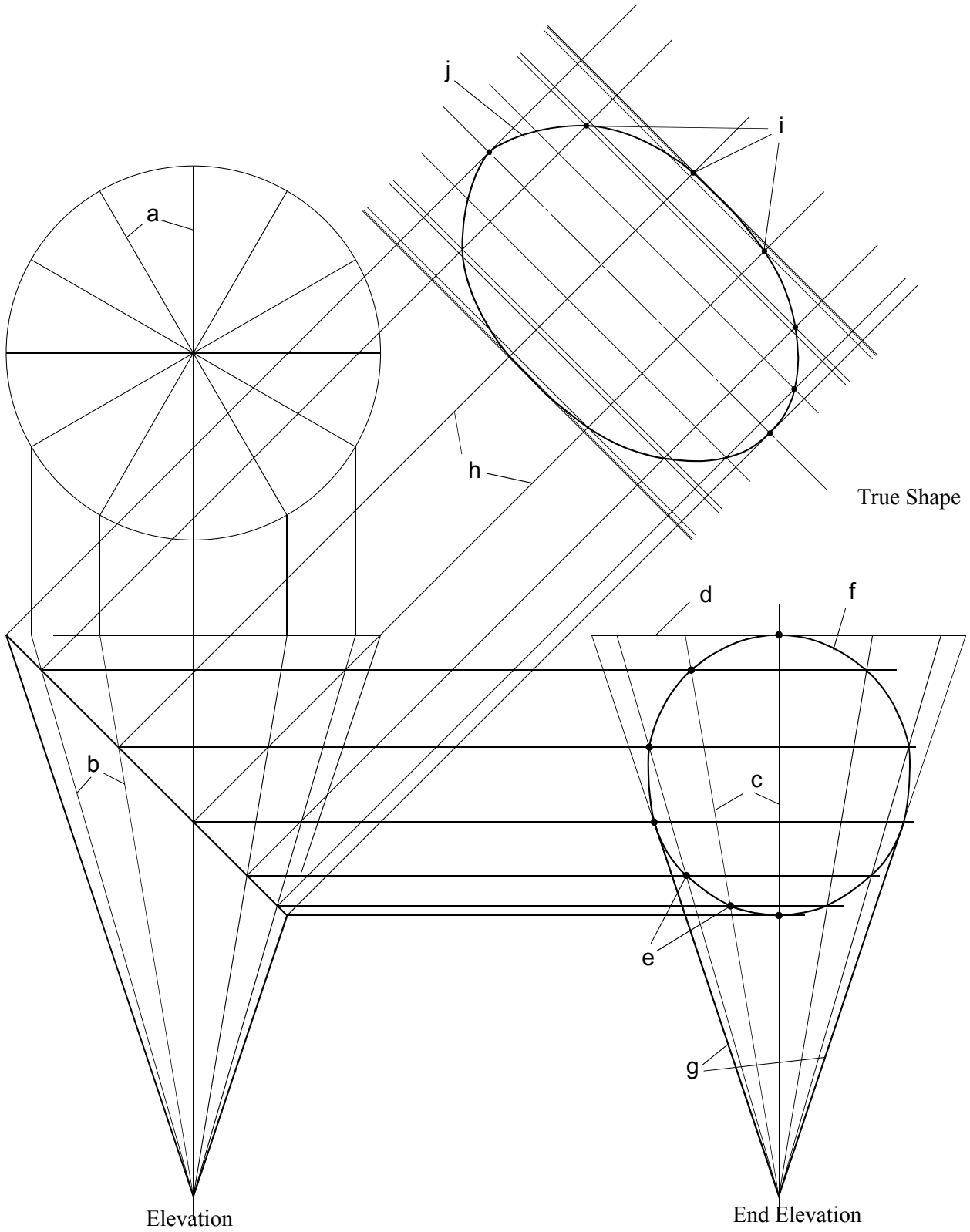

8.	(a)	isometric crate for base (L, B + H)	**1**	
	(b)	isometric crate for clock body (L, B + H)	**1**	
	(c)	Feet shown on front of base	**1**	
	(d)	Feet shown on side of base	**1**	
	(e)	Design as surface detail (both)	**1**	
	(f)	Design raised forward	**1**	
	(g)	Construction for Iso (semi-circle)	**1**	
	(h)	Establish points for semi-circle	**2**	**3–5 for 1**
	(i)	Establish rear curve	**1**	
	(j)	Construction for Iso (clockface)	**1**	
	(k)	Establish curve points (clockface)	**2**	**4–8 for 1**
	(l)	Freehand curves	**1**	

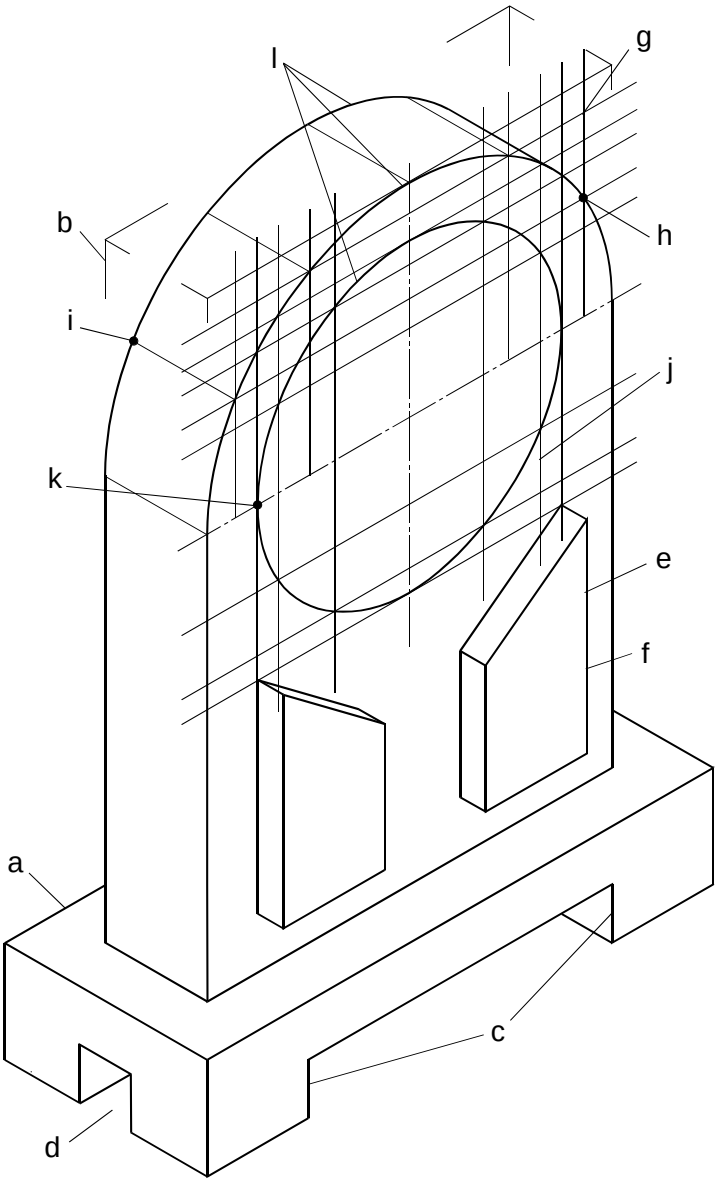

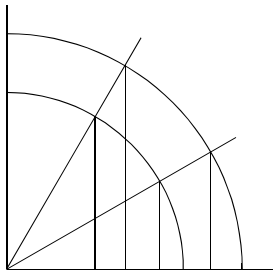

	Plan		
9.	(a)	Diagonals	**1**
	(b)	Project cut from elevation	**1**
	(c)	Cut surface shown	**1**
	(d)	Edges to cut (outline)	**1**
	End Elevation		
	(e)	Base width	**1**
	(f)	Project pyramid const.	**1**
	(g)	Project cut from elev.	**1**
	(h)	Edges of pyramid (outline)	**1**

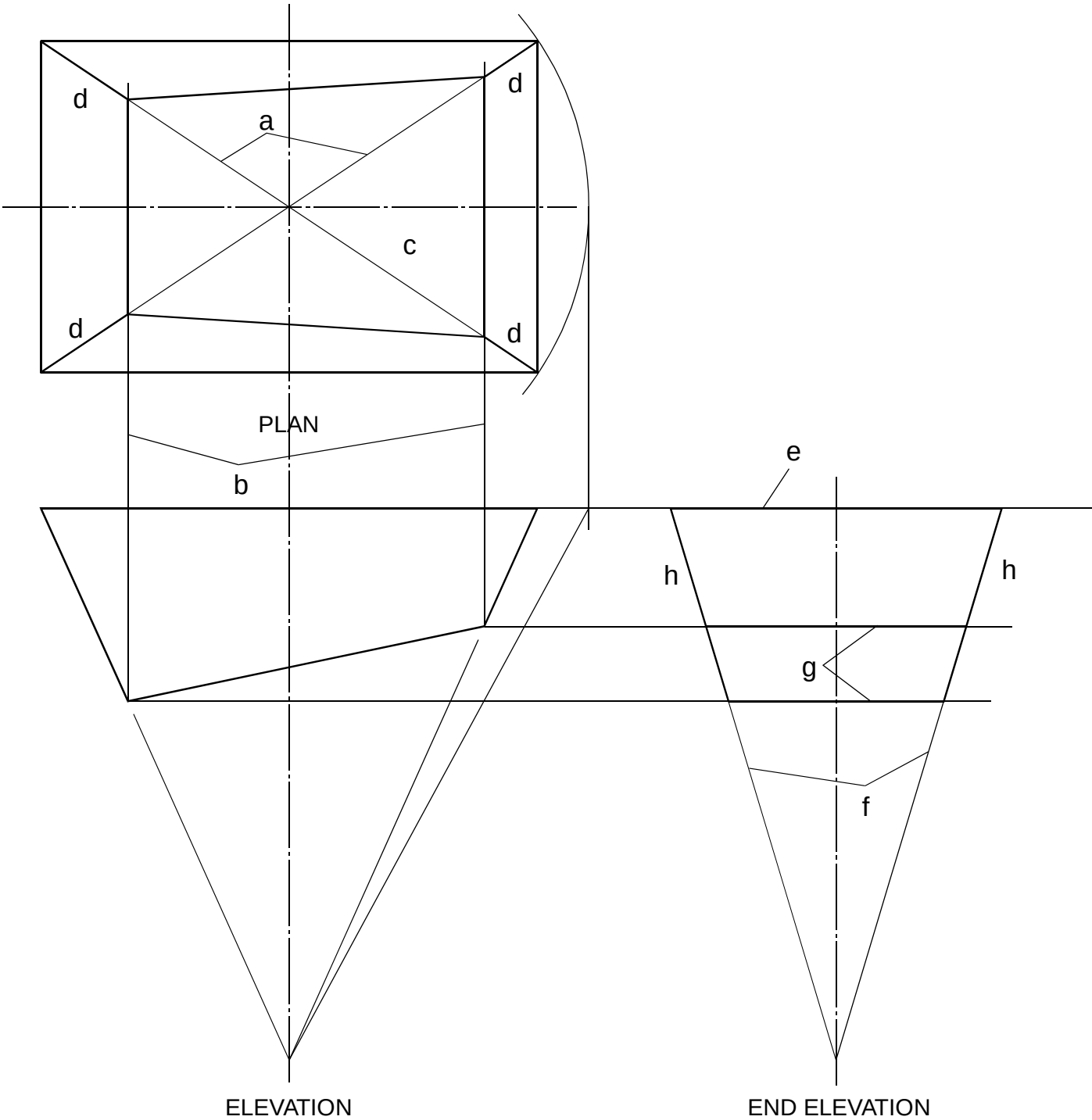

	Development		
9.	(i)	True length of edge	**1**
	(j)	Base lengths	**1**
	(k)	Transfer of lengths cut	**1**
	(l)	Cut outline shown	**1**
	(m)	Pyramid edges (outline)	**1**
	(n)	Base outline	**1**

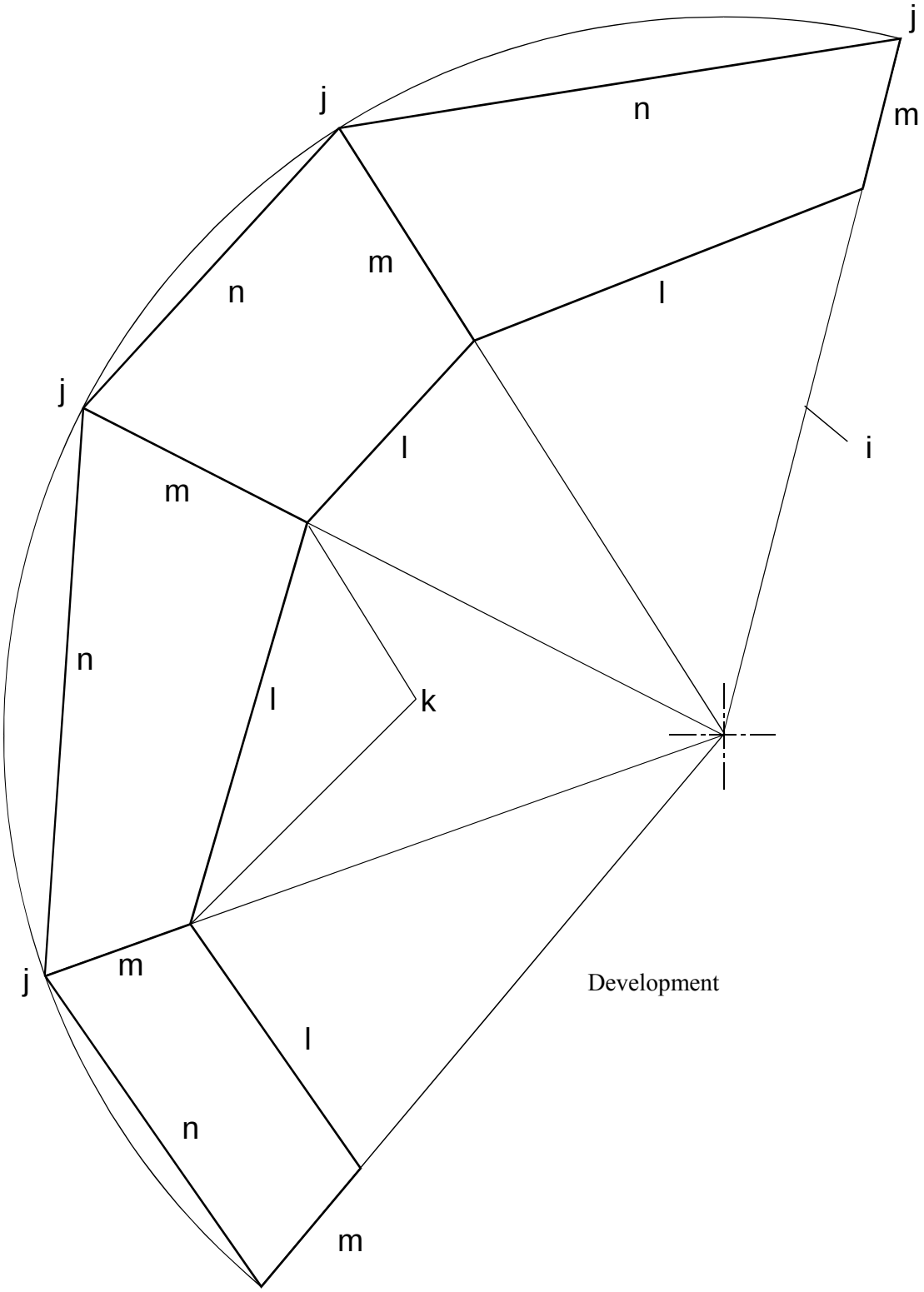

Development

Sectional Elevation

7.	(g)	Top clip (l&h)	**1**
	(h)	Strap hole in top clip	**1**
	(i)	Two rectangles	**1**
	(j)	Strap hole in bottom clip	**1**
	(k)	Inside edges of top clip	**1**
	(l)	Two sloping lines	**1**
	(m)	Bottom clip (l&h)	**1**
	(n)	Inside edges bottom clip	**1**
	(o)	Hatching shown	**1**
	(p)	Correct BS convention (2 parts)	**1**

End Elevation

7.	(a)	Rectangle (l&b)	**1**
•	(b)	Three horizontal lines 2 of 3	**1**
•	(c)	Hidden detail (strap holes) 2 of 4	**1**
	(d)	Two vertical lines	**1**
	(e)	Two horizontal hidden detail	**1**
•	(f)	Four vertical hidden detail	**1**

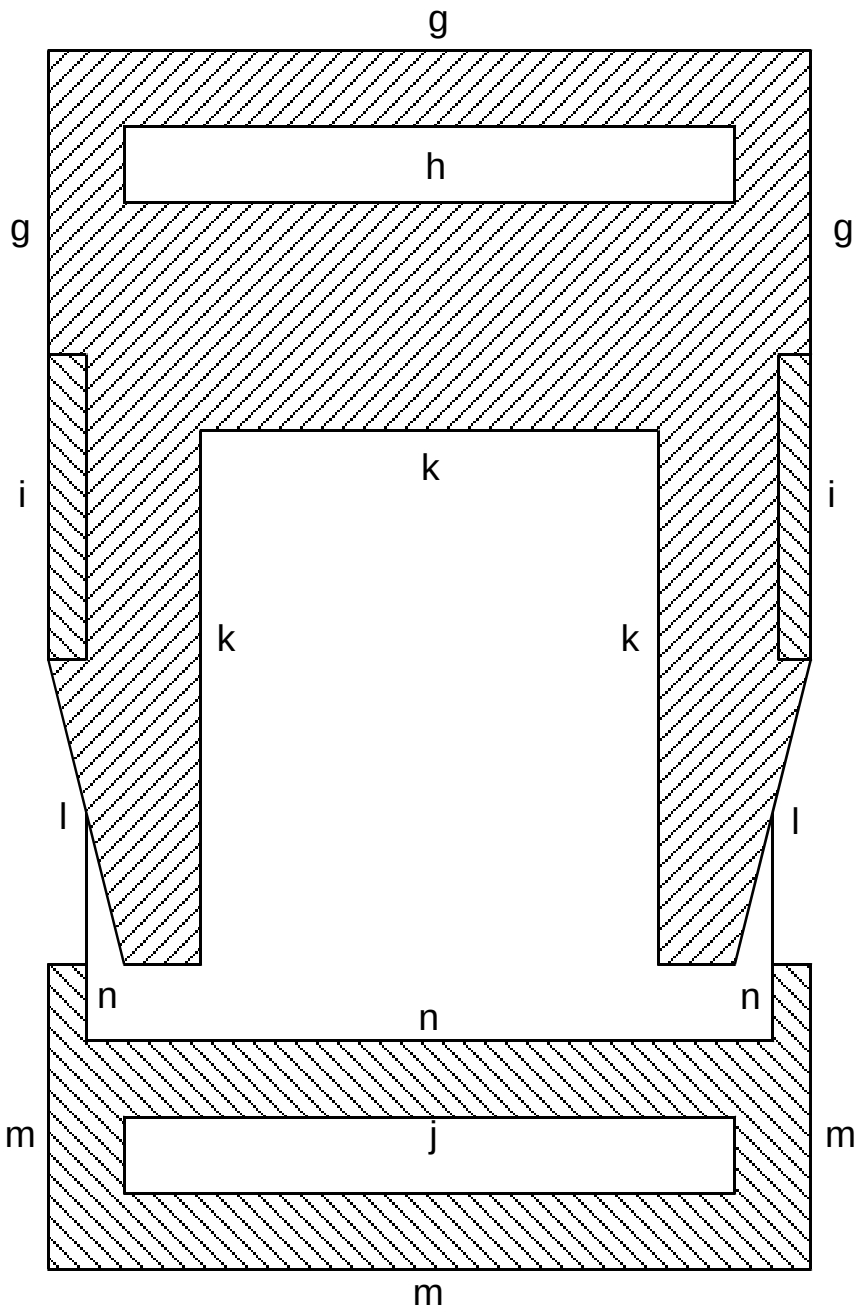

Elevation

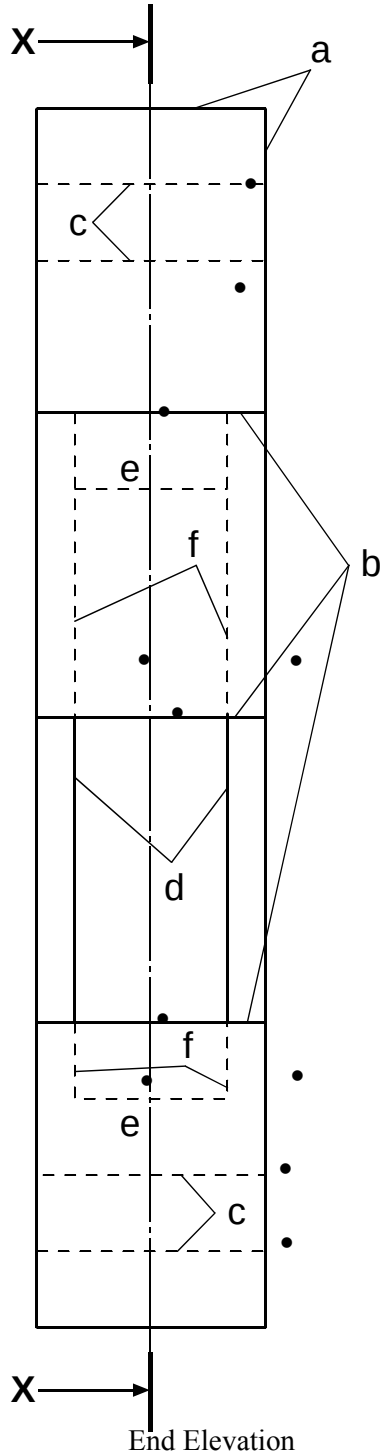

End Elevation

[END OF MARKING INSTRUCTIONS]