2007 Physics

Intermediate 1

Finalised Marking Instructions

© Scottish Qualifications Authority 2007

The information in this publication may be reproduced to support SQA qualifications only on a non-commercial basis. If it is to be used for any other purposes written permission must be obtained from the Assessment Materials Team, Dalkeith.

Where the publication includes materials from sources other than SQA (secondary copyright), this material should only be reproduced for the purposes of examination or assessment. If it needs to be reproduced for any other purpose it is the centre's responsibility to obtain the necessary copyright clearance. SQA's Assessment Materials Team at Dalkeith may be able to direct you to the secondary sources.

These Marking Instructions have been prepared by Examination Teams for use by SQA Appointed Markers when marking External Course Assessments. This publication must not be reproduced for commercial or trade purposes.

Physics – Marking Issues

The current in a resistor is 1·5 amperes when the potential difference across it is 7·5 volts. Calculate the resistance of the resistor.

	Answers	Mark + Comment	Issue
1.	V=IR 7·5=1·5R R=5·0 Ω	(½) (½) (1)	Ideal answer
2.	5·0 Ω	(2) Correct answer	GMI 1
3.	5·0	(1½) Unit missing	GMI 2 (a)
4.	4·0 Ω	(0) No evidence/wrong answer	GMI 1
5.	_____ Ω	(0) No final answer	GMI 1
6.	$R = \frac{V}{I} = \frac{7{\cdot}5}{1{\cdot}5} = 4{\cdot}0\,\Omega$	(1½) Arithmetic error	GMI 7
7.	$R = \frac{V}{I} = 4{\cdot}0\,\Omega$	(½) Formula only	GMI 4 and 1
8.	$R = \frac{V}{I} =$ _____ Ω	(½) Formula only	GMI 4 and 1
9.	$R = \frac{V}{I} = \frac{7{\cdot}5}{1{\cdot}5} =$ _____ Ω	(1) Formula + subs/No final answer	GMI 4 and 1
10.	$R = \frac{V}{I} = \frac{7{\cdot}5}{1{\cdot}5} = 4{\cdot}0$	(1) Formula + substitution	GMI 2 (a) and 7
11.	$R = \frac{V}{I} = \frac{1{\cdot}5}{7{\cdot}5} = 5{\cdot}0\,\Omega$	(½) Formula but wrong substitution	GMI 5
12.	$R = \frac{V}{I} = \frac{75}{1{\cdot}5} = 5{\cdot}0\,\Omega$	(½) Formula but wrong substitution	GMI 5
13.	$R = \frac{I}{V} = \frac{7{\cdot}5}{1{\cdot}5} = 5{\cdot}0\,\Omega$	(0) Wrong formula	GMI 5
14.	V = IR 7·5 = 1·5 × R R = 0·2 Ω	(1½) Arithmetic error	GMI 7
15.	V = IR $R = \frac{I}{V} = \frac{1{\cdot}5}{7{\cdot}5} = 0{\cdot}2\,\Omega$	(½) Formula only	GMI 20

SECTION A

1.	**B**	**11.**	**B**
2.	**C**	**12.**	**B**
3.	**B**	**13.**	**E**
4.	**C**	**14.**	**A**
5.	**D**	**15.**	**D**
6.	**A**	**16.**	**D**
7.	**A**	**17.**	**E**
8.	**D**	**18.**	**D**
9.	**C**	**19.**	**E**
10.	**B**	**20.**	**E**

DO NOT WRITE IN THIS MARGIN

Marks

SECTION B

Answer questions 21–31 in the spaces provided.

21. Mobile phones are used by many people today.

(*a*) From the list below, circle the type of signal used by mobile phones to send and receive phone calls.

Gamma	**X-Rays**	**Ultraviolet**
Visible Light	**Infrared**	**Radio & TV**

1

(*b*) Name the device used in a mobile phone to change sound energy into electrical energy.

microphone

1

(*c*) (i) Name the device used in a mobile phone that produces sound.

loudspeaker

1

(ii) What must this device do to produce sound?

vibrate
OR
change electrical energy to sound energy

1

21. (continued)

Marks

(*d*) In an experiment to investigate mobile phone signals, a student sets up the following equipment. The mobile phone transmits signals as pulses.

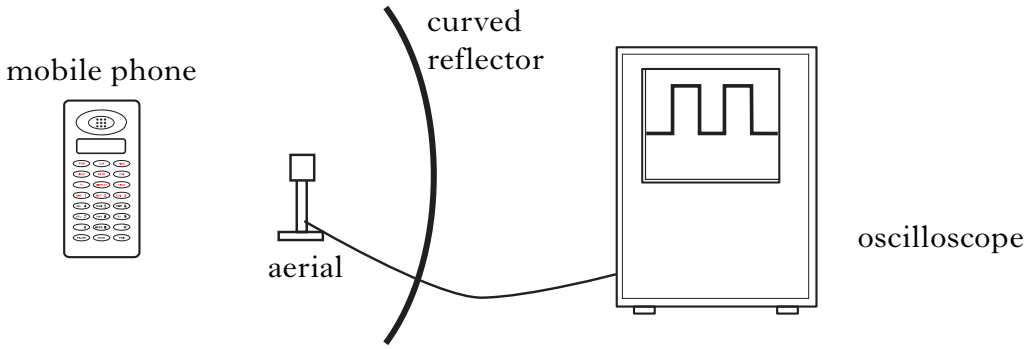

(i) Why is there a curved reflector behind the aerial?

to make the signal stronger OR to direct the signals to the aerial **1**

(ii) Complete the diagram below to show how the curved reflector affects the signals. On your diagram mark where the aerial should be positioned to get the strongest signal.

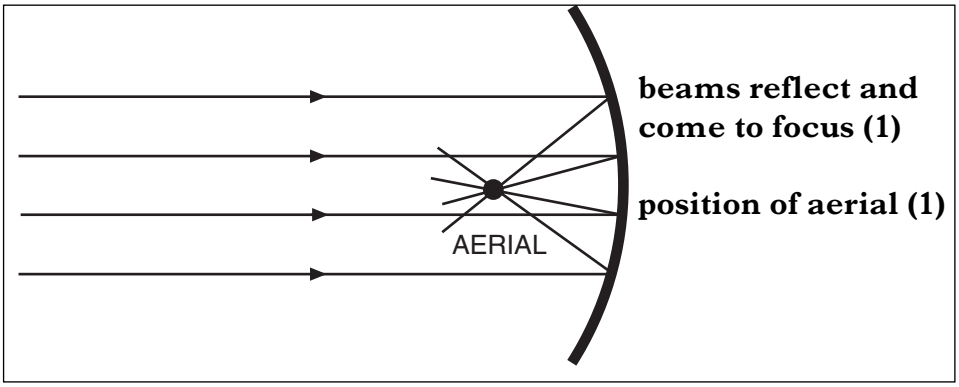

2

(iii) On the blank oscilloscope grid below, draw the signal that you would expect to see if the curved reflector was removed.

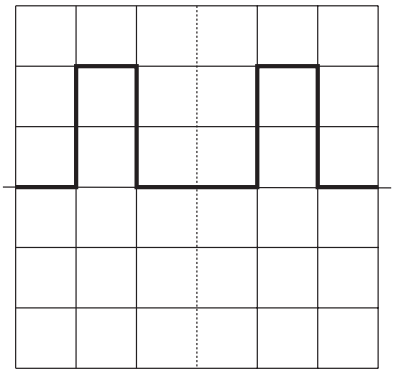

Signal received when a curved reflector is used.

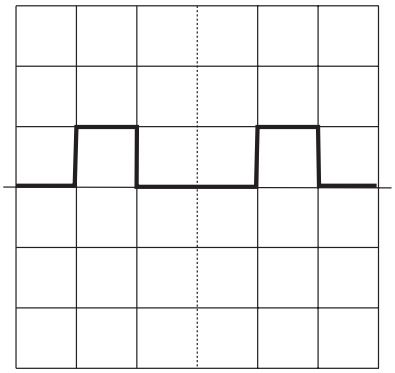

Signal received with curved reflector removed.

same frequency (1)

any smaller amplitude (1)

2

DO NOT WRITE IN THIS MARGIN

Marks

22. Cars have many different electric circuits.

(*a*) This circuit shows how the headlights are connected.

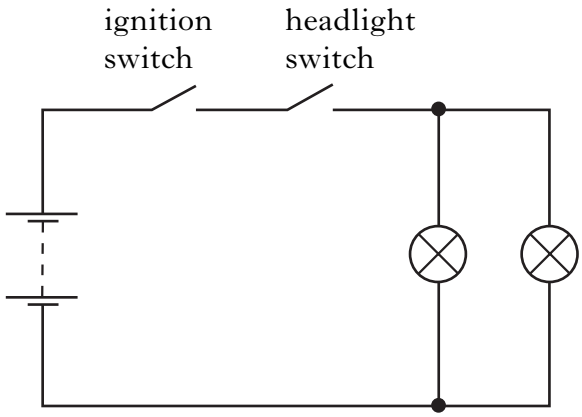

(i) Are the switches connected in series or parallel?

series **1**

(ii) Give a reason why the switches are connected in this way.

headlights can only come on when the ignition is on **1**

(iii) When the headlights are operating normally, the current in each lamp is 4·5 amperes.

What is the current from the battery when the headlights operate normally?

9 amperes **1**

DO NOT WRITE IN THIS MARGIN

Marks

22. (continued)

(*b*) This circuit diagram shows how the windscreen wiper motor is connected.

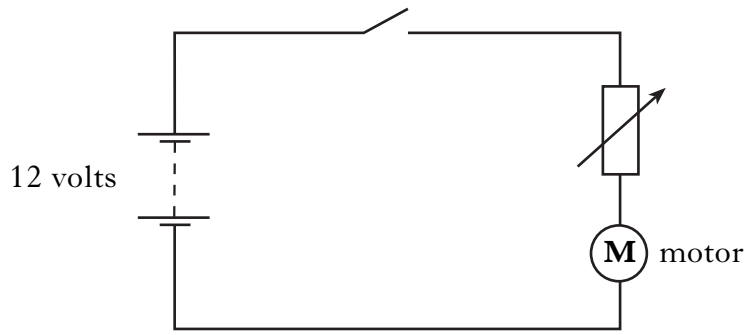

(i) When the switch is closed, the voltage across the variable resistor is 2·4 volts. What is the voltage across the motor?

9·6 volts

1

(ii) The current in the variable resistor is 0·6 amperes.
Calculate the resistance of the variable resistor.

$$\textbf{resistance} = \frac{\textbf{voltage}}{\textbf{current}} \ (\tfrac{1}{2}) \quad = \quad \frac{2\cdot4}{0\cdot6}(\tfrac{1}{2}) \quad = \ \textbf{4 ohms (1)}$$

2

(iii) The resistance of the variable resistor is increased.

(A) What will happen to the speed of the motor?

(speed will) decrease

1

(B) Explain your answer.

current is smaller

1

DO NOT WRITE IN THIS MARGIN

Marks

23. A football match is broadcast live on television.

Some viewers are watching the match in a house 1 kilometre away from the stadium.

(*a*) A goal is scored and the viewers first hear the crowd on the television and then hear the crowd from the stadium.

Explain why there is a delay.

speed of <u>sound</u> less than speed of <u>TV</u> signals

1

(*b*) Complete the block diagram below showing the main parts of a television.

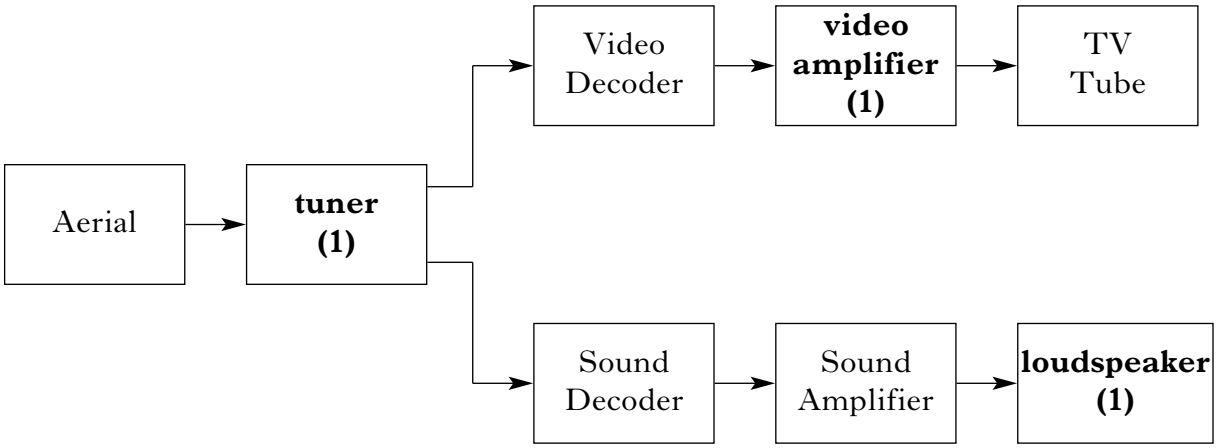

3

DO NOT WRITE IN THIS MARGIN

Marks

24. A student made a telescope to look at distant objects.
The telescope has 2 lenses called the objective and eyepiece.

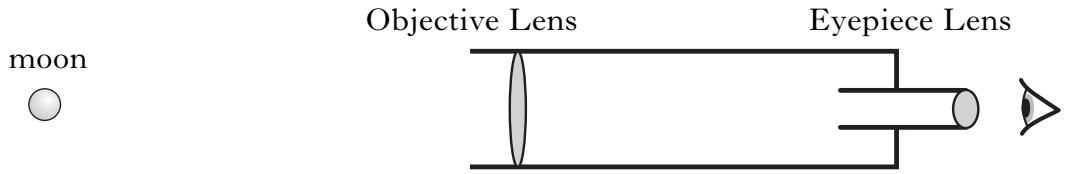

The table below gives information about the lenses.

Name	*Diameter*	*Thickness*	*Purpose*
Objective	Large	Thin	Collect light
Eyepiece	Small	Thick	Magnify

(*a*) Looking at the diagram, name the **type of lens** used as the objective.

convex OR converging — **1**

(*b*) The student now looks through the telescope from the other end.

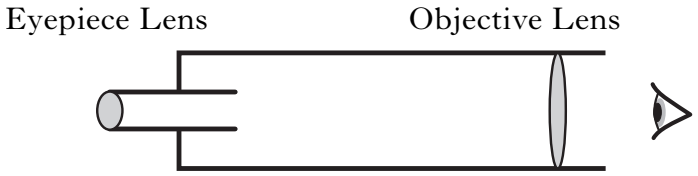

(i) Would the image now be **brighter**, **less bright** or the **same brightness** than the image he first saw in part (*a*)?
Explain your answer.

less bright (1)

smaller diameter (collects less light) (1) — **2**

(ii) Would the image be **larger**, **smaller** or the **same size** than the image he first saw in part (*a*)?
Explain your answer.

smaller (1)
<u>thinner</u> lens OR lens magnifies less (1) — **2**

DO NOT WRITE IN THIS MARGIN

Marks

25. Table 1 lists some uses of different types of radiation.

Table 1

	Use
A	Detected by the eye
B	Check luggage at airports
C	Control model cars
D	Grill food
E	Kills cancer cells
F	Gives a suntan

Complete Table 2 using the letters A, B, C, D, E and F, to match each radiation with its use.

You should use each letter **once** only.

Table 2

Radiation	
Gamma	**E** ($\frac{1}{2}$)
X-Rays	**B** ($\frac{1}{2}$)
Ultra-Violet	**F** ($\frac{1}{2}$)
Visible Light	**A** ($\frac{1}{2}$)
Infra Red	**D** ($\frac{1}{2}$)
Radio waves	**C** ($\frac{1}{2}$)

3

DO NOT WRITE IN THIS MARGIN

Marks

26. The diagram shows rays of light entering an eye of someone with **normal vision**.

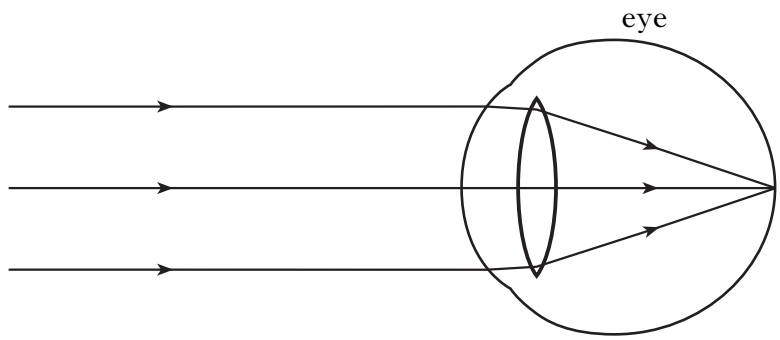

(*a*) (i) Complete the diagram below to show how rays of light from a **distant object** enter the eye of someone with **short sight**.

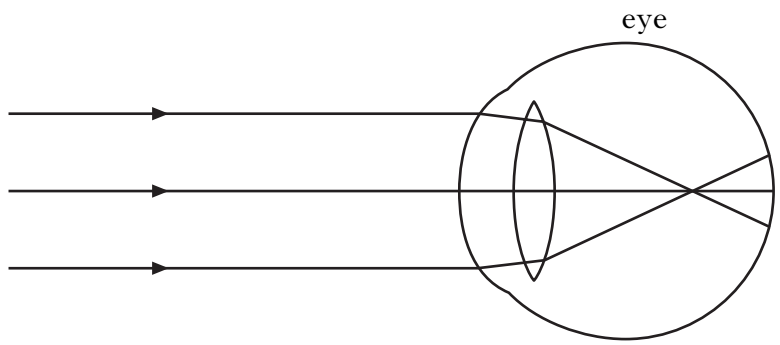

1

(ii) Complete the diagram below to show how rays of light from a **near object** enter the eye of someone with **short sight**.

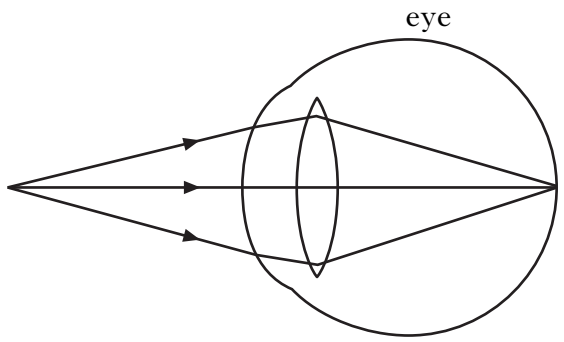

1

(*b*) Name the type of lens used to correct short sight.

concave OR diverging

1

DO NOT WRITE IN THIS MARGIN

Marks

27. Some boats use sound waves to find the depth of the sea.

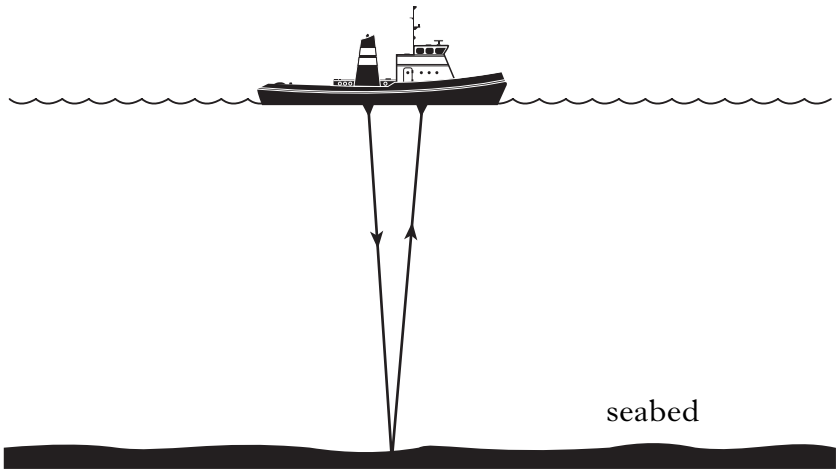

(*a*) Sound waves are sent out by a device on the bottom of the boat.
They are detected after reflecting off the seabed.
In the passage below, circle the correct words.

Sound waves are sent out by a transmitter/receiver

and picked up by a transmitter/receiver. **1**

DO NOT WRITE IN THIS MARGIN

Marks

27. (continued)

(*b*) An oscilloscope screen on the boat shows the sound signal being sent out and detected after reflecting off the seabed.

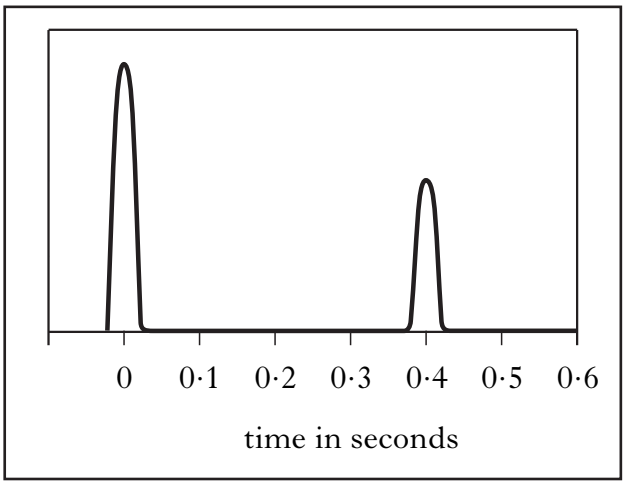

(i) Explain why the reflected signal has a smaller height than the signal sent out.

signal has lost energy

1

(ii) Look at the oscilloscope trace.
What is the time taken for the sound signal to reach the seabed?

0·2 seconds

1

(iii) The depth of the sea is 306 metres. Use your answer to part (ii) to calculate the speed of sound in the water.

$$\textbf{speed} = \frac{\textbf{distance}}{\textbf{time}} \left(\tfrac{1}{2}\right) = \frac{306}{0 \cdot 2} \left(\tfrac{1}{2}\right)$$

= 1530 metres per second (1)

2

DO NOT WRITE IN THIS MARGIN

Marks

28. A skydiver jumps out of a plane.

(*a*) The skydiver and her parachute have a total mass of 75 kilograms.
Calculate the total weight of the skydiver and parachute.

weight = 10 × mass $(\frac{1}{2})$ = 10 × 75 $(\frac{1}{2})$ = 750 newtons (1)

2

(*b*) When she first leaves the plane, the skydiver accelerates towards the earth.
What does the term accelerate mean?

to change or increase speed

1

(*c*) The diagram below shows the skydiver and the forces acting on her.

(i) Name the **two** vertical forces acting on the skydiver.

air <u>resistance</u> OR friction force OR drag **(1)**

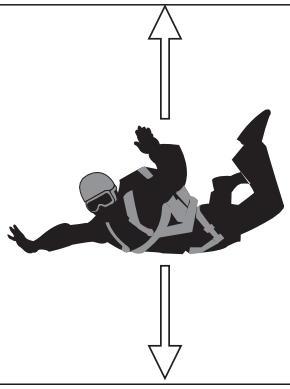

weight OR gravity force **(1)**

2

DO NOT WRITE IN THIS MARGIN

Marks

28. (*c*) (continued)

(ii) Some time later these two forces become balanced.

When the forces are balanced, does her speed **increase**, **stay the same** or **decrease**?

stays the same

1

(*d*) The skydiver then opens her parachute.

(i) What happens to her speed at this moment?

(speed) decreases

1

(ii) What happens to the upward force acting on her?

(upward force) increases

1

Marks

29. A student playing pool knows that when the cue ball hits a cushion it obeys the same rule as light reflecting off a mirror.

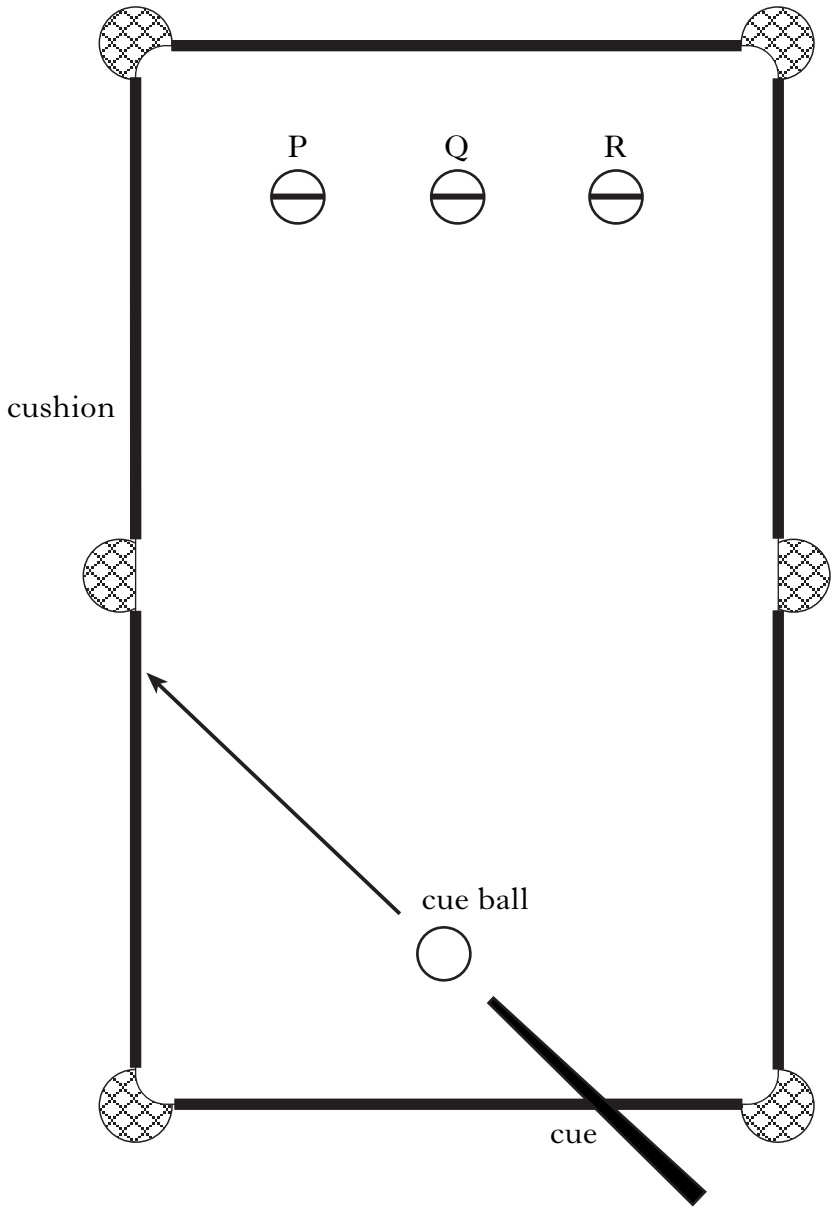

(*a*) Using this information, state which ball she will hit.

ball R **1**

Marks

29. (continued)

(*b*) Her friend wants to know how fast the cue ball moves immediately after it has been struck. They use a light gate, an electronic timer and a ruler.

Describe how this equipment would be used to find the speed of the ball immediately after it has been struck.

Your description should include:

- the measurements taken
- how these measurements would be used to calculate the instantaneous speed.

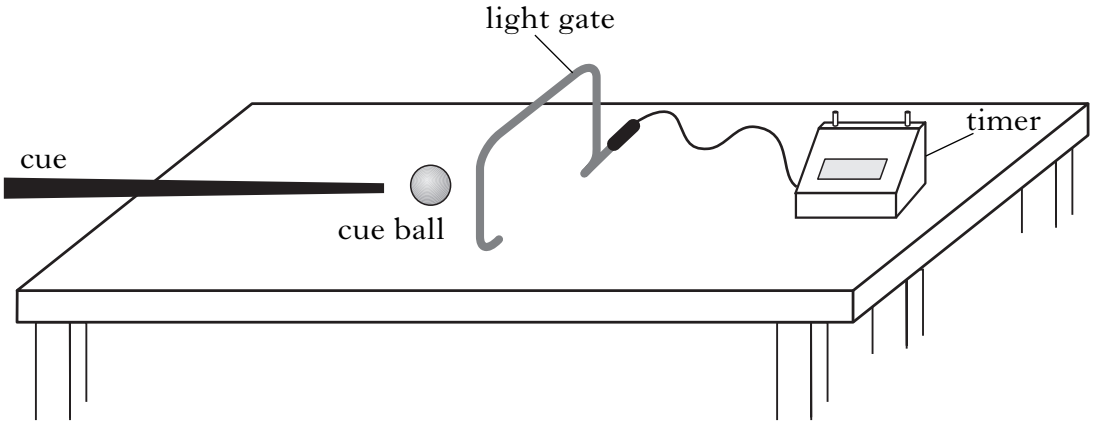

<u>the width of the ball</u> **($\frac{1}{2}$)**

the time to pass through light gate OR time on timer **($\frac{1}{2}$)**

$$\textbf{speed} = \frac{\textbf{width of ball}}{\textbf{time on timer}} \quad \textbf{(1)}$$

2

Marks

30. A museum has a statue on display. A security system is in place to protect the statue.

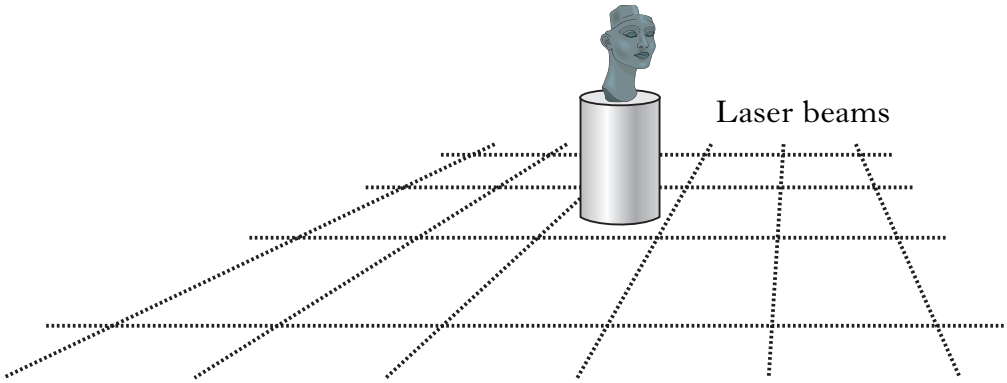

(*a*) The system uses laser beams which will sound an alarm if broken.
The diagram of the laser alarm system is shown below.
The system is activated by a master switch.

Laser beam broken	Logic 0
Laser beam not broken	Logic 1

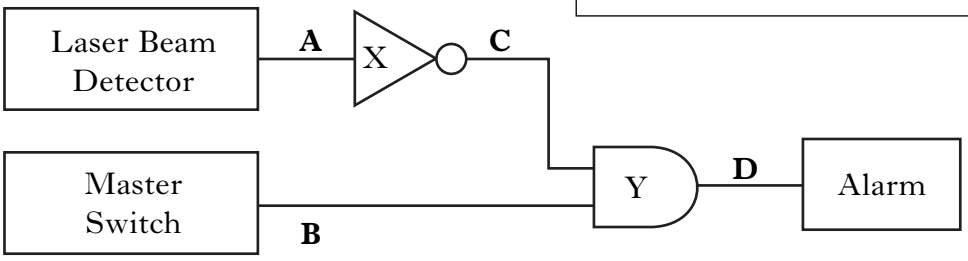

(i) Name logic gate Y. **AND gate** **1**

(ii) Complete the table below to show the logic levels at **C** and **D**.

A	**B**	**C**	**D**
0	0	**1**	**0**
0	1	**1**	**1**
1	0	**0**	**0**
1	1	**0**	**0**
		(1)	**(1)**

2

Marks

30. (continued)

(*b*) To improve security, the statue is placed on a pressure pad.

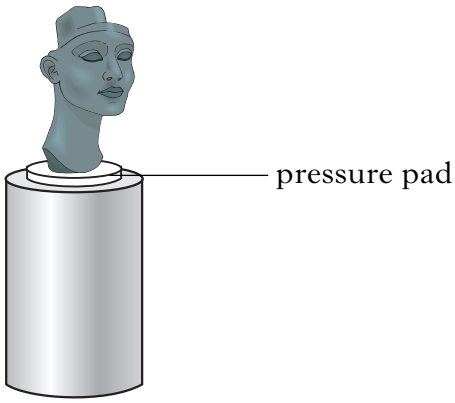

If the statue is lifted from the pressure pad, a small voltage is produced. This voltage has to be amplified to operate the alarm.

(i) Calculate the voltage gain of the amplifier.

$$\textbf{voltage gain} = \frac{\textbf{output voltage}}{\textbf{input voltage}} \ (\tfrac{1}{2}) = \frac{3 \cdot 5}{0 \cdot 02} \ (\tfrac{1}{2}) = 175 \ (1)$$

2

(ii) The power rating of the alarm is 14 W.
Calculate the current in the alarm when it operates.

$$\textbf{current} = \frac{\textbf{power}}{\textbf{voltage}} \ (\tfrac{1}{2}) = \frac{14}{3 \cdot 5} \ (\tfrac{1}{2}) = 4 \textbf{ amperes } (1)$$

2

DO NOT WRITE IN THIS MARGIN

Marks

31. Washing machines use thermistors as temperature sensors.

(*a*) Is a thermistor an **input**, **process** or an **output** device?

input device **1**

(*b*) A student wants to check that a washing machine thermistor is working correctly. He sets up the following experiment.

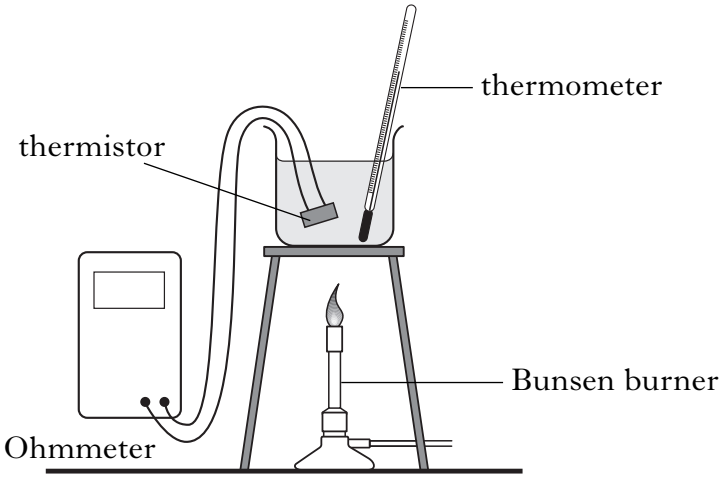

Explain how he should use the equipment to investigate how the resistance of the thermistor is affected by temperature.

Your answer should include:

- how he used the equipment
- what he measured.

heat water with bunsen burner **($\frac{1}{2}$)**

measure <u>resistance</u> of thermistor with <u>ohmmeter</u> **($\frac{1}{2}$)**

measure <u>temperature</u> of water with <u>thermometer</u> **($\frac{1}{2}$)**

take readings for several different temperatures **($\frac{1}{2}$)**

2

DO NOT WRITE IN THIS MARGIN

Marks

31. (continued)

(*c*) After the experiment the student plotted the following graph.

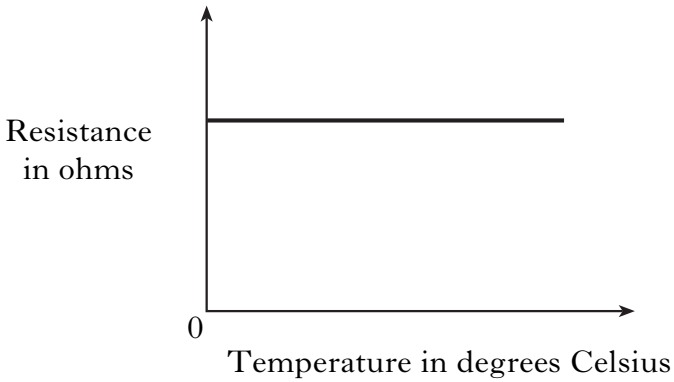

(i) Was the thermistor working correctly?

not working correctly

1

(ii) Explain your answer.

<u>resistance</u> did not change as <u>temperature</u> increased

1

[*END OF MARKING INSTRUCTIONS*]