X028/12/01

NATIONAL QUALIFICATIONS 2014

WEDNESDAY, 4 JUNE
9.00 AM – 12.00 NOON

MECHATRONICS
HIGHER

100 marks are allocated to this paper.

Attempt **all** questions in Section A (50 marks).

Attempt any **two** questions from Section B (50 marks).

Use labelled diagrams and sketches to illustrate your answers where appropriate.

All calculations must be supported by working.

A PLC datasheet is included for question 7.

A Flowchart symbol sheet is included for questions 5, 11, 12 and 13.

Worksheets are provided for questions 9(*a*), 10 and 12(*c*).

©

Marks

SECTION A

Attempt ALL questions in this Section (50 marks).

1. The diagram in Figure Q1 shows the basic architecture of a microcontroller. Some elements have been labelled with the letters A, B, C and D.

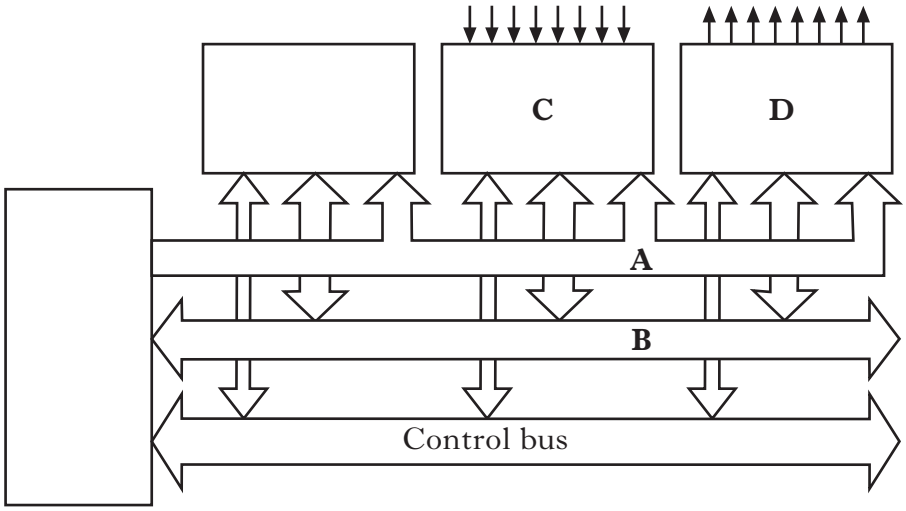

Figure Q1

(*a*) State the names of the elements labelled A, B, C and D in Figure Q1. **2**

(*b*) With reference to Figure Q1, state which **one** of the following three statements correctly describes the nature of the data flow on the **address bus** in a microcontroller.

Statement 1: The data flow is Omnidirectional on the **address bus**.

Statement 2: The data flow is Bi-directional on the **address bus**.

Statement 3: The data flow is Unidirectional on the **address bus**. **1**

(*c*) A mechatronic control system is used within an industrial environment. State **two** advantages, excluding cost, that a microcontroller based system has over a hard wired system. **2**

(5)

Marks

2. A mechatronic system uses a sensor to sense the water temperature in a storage tank which is to be maintained at a set temperature.

When the set temperature is reached the sensor is used to open an electrical contact which in turn switches OFF the electrical supply to a heating element.

The temperature sensor is also used to close an electrical circuit, switching ON the electrical supply, when the water temperature falls below the preset temperature.

(*a*) State **one** type of sensor that could be used in the above mechatronic system to sense the water temperature. **1**

(*b*) With the aid of a simple sketch, briefly describe the basic operation of the sensor chosen in Q2(*a*). **2**

(*c*) The above mechatronic system exhibits a particular control strategy. State the name of this control strategy and sketch a simple graph of temperature against time for the water in the storage tank. **2**

(5)

3. (*a*) Sketch the work envelope for the following robot geometries.

(i) SCARA

(ii) Polar **2**

(*b*) Briefly describe why the end effector is not included in a manufacturer's specification of a robot's work envelope. **1**

(*c*) Electrical motors are often used in small industrial robots. State **two** reasons, excluding cost, why an electrical motor drive system may be chosen. **2**

(5)

[Turn over

Marks

4. Figure Q4 illustrates part of an optical incremental encoder.

Figure Q4

(*a*) (i) Explain the basic operation of this type of encoder. **2**

(ii) Sketch the output signal expected from this type of encoder. **1**

(*b*) State **two** mechatronic applications where an optical incremental encoder may be used. **2**

(5)

Marks

5. The automated hand dryer shown in Figure Q5 consists of a controller, a proximity sensor, a heating element and a motorised fan.

The system is designed to blow warm air for 1 minute after the proximity sensor is activated. The system will then stop automatically. The heating element is interlocked to the motorised fan and cannot operate until the fan is running. The heating element is switched off 5 seconds before the fan is stopped.

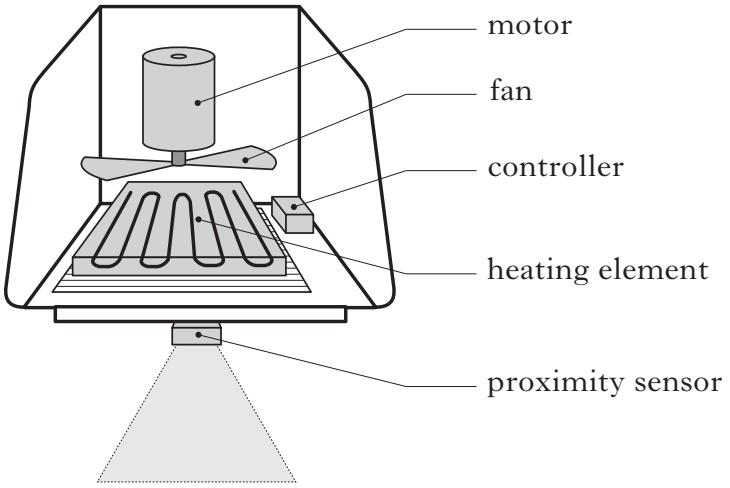

Figure Q5

Sketch a flowchart outlining the operation of the system, clearly identifying any inputs, outputs and timing events required for the correct operation. Start with the first two flowchart steps shown below. **(5)**

Note: the inserted Flowchart Symbol sheet Q5/Q11/Q12/Q13 gives a suitable selection of Flowchart Symbols.

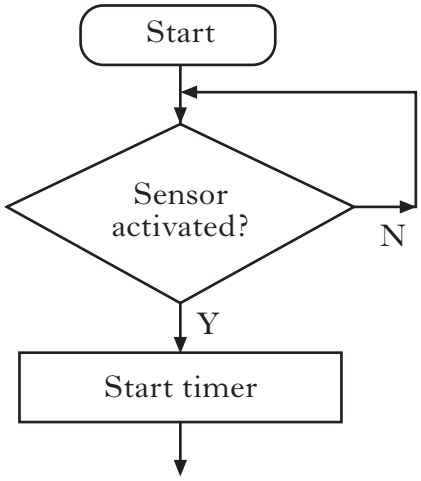

[Turn over

Marks

6. (*a*) The following are two types of controller that may be used in a mechatronic control system.

- ASIC
- Programmable Logic Control (PLC)

State how the controlling action could be altered for **each** of these controllers. **2**

(*b*) State how a closed loop control system generally differs from an open loop control system when applied to the same process in terms of:

(i) complexity;

(ii) accuracy. **2**

(*c*) Briefly describe or use a sketch to show the difference between digital signals and analogue signals in the context of a mechatronic system. **1**

(5)

7. A mechatronic control system uses a Programmable Logic Controller (PLC).

(*a*) Sketch a PLC ladder diagram that shows an output Y0, which is energised by:

The closure of contact X0 **AND** contact X1. **2**

(*b*) Sketch a PLC ladder diagram that shows an output Y0, which is energised by:

The closure of contact X0 **AND** contact X1, **OR** the closure of contact X2. **1**

(*c*) Ladder Diagram Q7(*c*) shows a PLC program.

Describe the operation of Ladder Diagram Q7(*c*) starting from the press (and release) of the Normally Open START button, X3. **2**

(5)

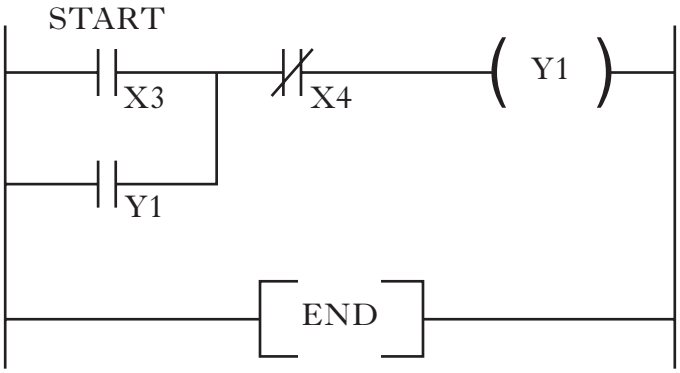

Ladder Diagram Q7(*c*)

Note: the inserted PLC Datasheet Q7 gives the PLC instruction set.

Marks

8. Figure Q8 shows part of a motion and position detection system magnified for clarity. The system comprises a fixed rack and a carriage which is driven along the rack as the toothed wheel turns. Tooth sensor A is mounted on the moving carriage. Teeth have a pitch of 20 teeth per 100 mm.

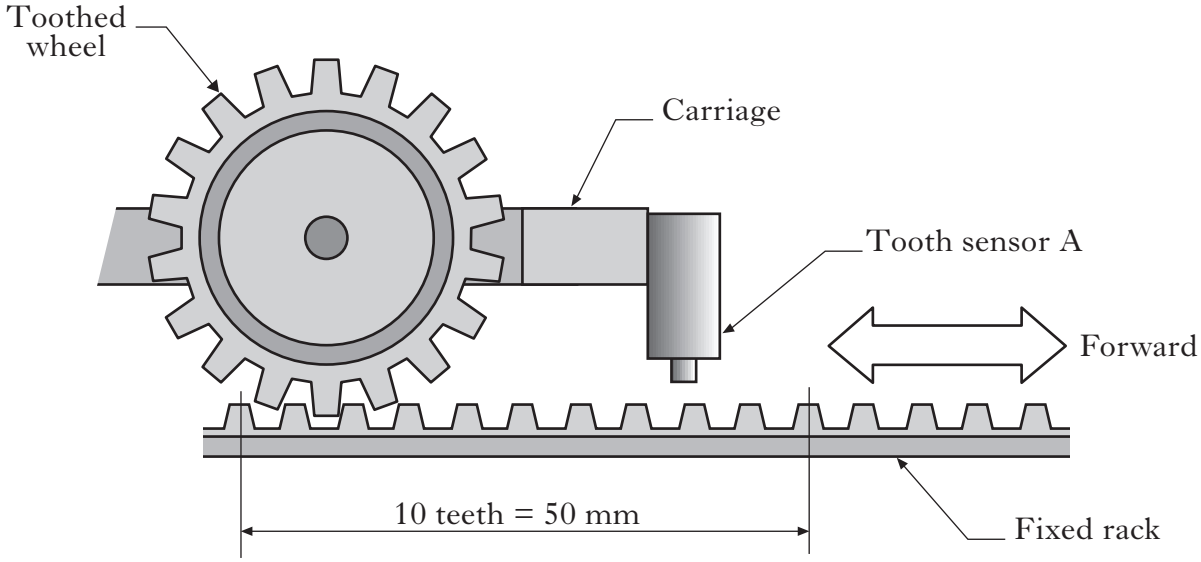

Figure Q8

(*a*) Sketch the logic level output waveform from Tooth sensor A when the carriage is moving in the Forward direction. **1**

(*b*) State how the linear velocity of the carriage may be interpreted from the output signal of Tooth sensor A. **1**

(*c*) Calculate the linear velocity in **metres per second (m/s)** if the output waveform has a frequency of 100 Hz. **2**

(*d*) State how the system could be adapted to allow the direction of travel of the carriage to be obtained. **1**

(5)

[Turn over

Marks

9. Table Q9(*a*) shows a selection of codes used in Mechatronic Systems.

Decimal	**Code name =**	**Code name =**
0	0000	0000 0000
1	0001	0000 0001
2	0011	0000 0010
3	0010	0000 0011
4	0110	0000 0100
5	0111	0000 0101
6	0101	
7		0000 0111
8	1100	0000 1000
9	1101	0000 1001
10	1111	0001 0000
11		0001 0001
12	1010	0001 0010
13	1011	
14	1001	0001 0100
15	1000	0001 0101

Table Q9(*a*)

(*a*) On **Worksheet Q9(*a*)**, complete Table Q9(*a*) by inserting:

(i) each of the **two** missing code names; **2**

(ii) each of the **four** missing code values. **2**

(*b*) In your answer book, state **one** advantage, excluding cost, of choosing a hydraulic drive system over an electric motor drive system. **1**

(5)

Marks

10. This question consists of a series of multiple choice questions and answers for a number of mechatronic related themes. On **Worksheet Q10**, answer the multiple choice questions by putting a tick ✓ in the correct box.

(*a*) A Thermistor is a device used to measure

A Temperature ☐
B Pressure ☐
C Flow ☐
D Force ☐
E Time. ☐

(*b*) A Rotary encoder disc is used to

A measure level ☐
B provide heat ☐
C detect motion ☐
D increase air pressure ☐
E measure flow. ☐

(*c*) A Stepper motor is used to

A measure level ☐
B provide heat ☐
C provide motion ☐
D detect pressure ☐
E count pulses. ☐

(*d*) An example of a tactile sensor is

A an electric motor ☐
B a microswitch ☐
C a thermocouple ☐
D a Light Emitting Diode ☐
E a Hall effect device. ☐

(*e*) An example of a visual indicator is

A a microswitch ☐
B a thermocouple ☐
C a pressure sensor ☐
D a Light Emitting Diode ☐
E a strain gauge. ☐ **(5)**

[*END OF SECTION A*]

SECTION B

Attempt any TWO questions in this Section (50 marks).

Each question is worth 25 marks.

11. Figure Q11 illustrates a simplified lift system used to transport spare parts in a lift cage between the Stores level and the Workshop level in a maintenance workshop. The system is presently controlled by a microcontroller.

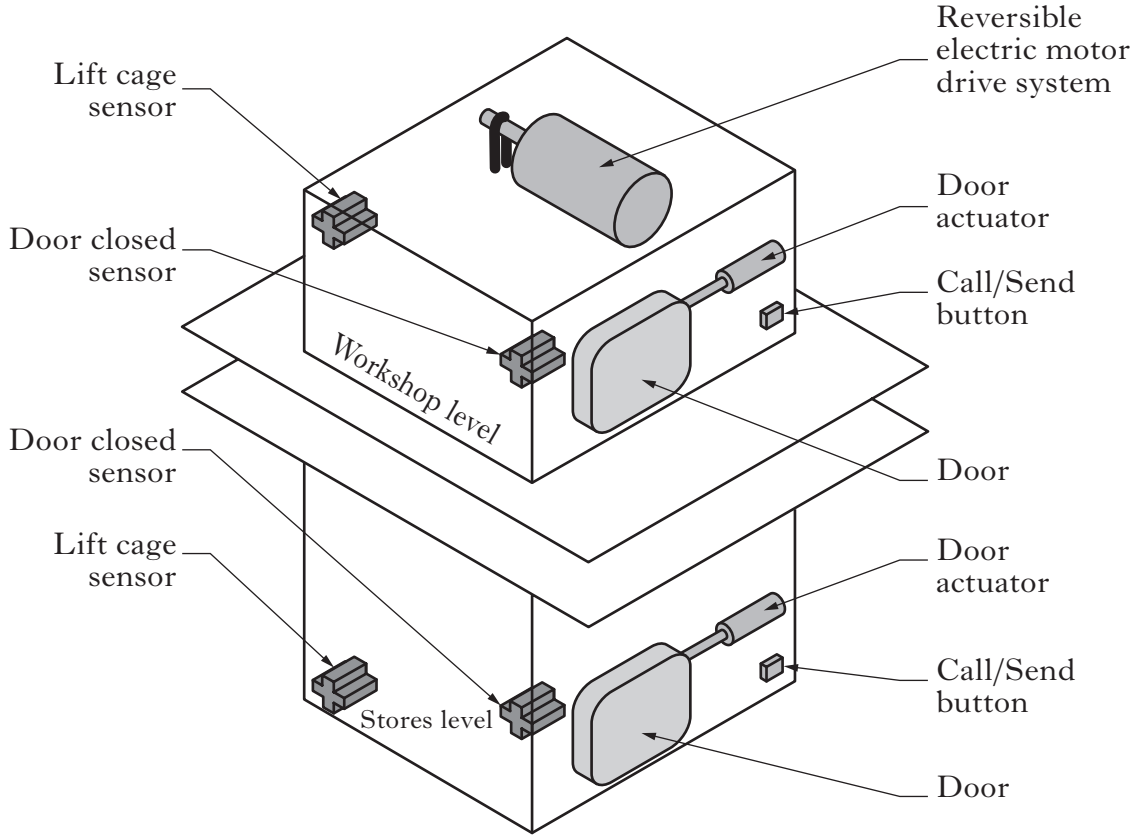

Figure Q11

The system uses a cable mechanism driven by a Reversible Electric Motor Drive System to move the cage between the two levels.

On each level:

- there is a Call/Send button to control the movement of the lift.
- there is a Lift cage sensor that informs the microcontroller about the cage presence.
- there is a Door closed sensor linked to the door mechanism.
- the door is automatically opened on arrival and automatically closed before the departure of the lift cage.

Marks

11. (continued)

(*a*) (i) List the inputs on the lift system that would require interfacing to the microcontroller.

(ii) List the outputs on the lift system that would require interfacing to the microcontroller. **5**

(*b*) Sketch a flowchart that shows the process of the lift cage moving **from** the **Stores level to the Workshop level**. Start with waiting for the Call/Send button to be activated on the Workshop level and the lift cage at the Stores level. **5**

Note: the inserted Flowchart Symbol sheet Q5/Q11/Q12/Q13 gives a suitable selection of Flowchart Symbols.

(*c*) The lift has a maximum load carrying capacity of 100 kg. Describe a suitable sensing system that could be incorporated into the lift system to prevent the load capacity being exceeded. **3**

(*d*) Briefly describe a suitable sensor type for the Door closed sensor. You may use a sketch to illustrate your description. **2**

(*e*) The lift doors are to be opened/closed by linear actuators. State **one** type of linear actuator and give **one** reason why you consider this a suitable choice of actuator. **2**

(*f*) Describe **two** safety concerns applicable to this type of mechatronic system and suggest a potential solution for each safety concern that could be incorporated into the lift system. **4**

(*g*) The system is presently controlled by a microcontroller. It is planned to upgrade the design to a Programmable Logic Controller (PLC) based control system with a touch screen display/control interface.

(i) List **two** advantages, other than cost, of this design upgrade. **2**

(ii) State and briefly describe **one** issue when interfacing a PLC to an industrial electric motor. **2**

(25)

[Turn over

Marks

12. Figure Q12 illustrates the main parts of a fan assisted bread oven with circulating air flow.

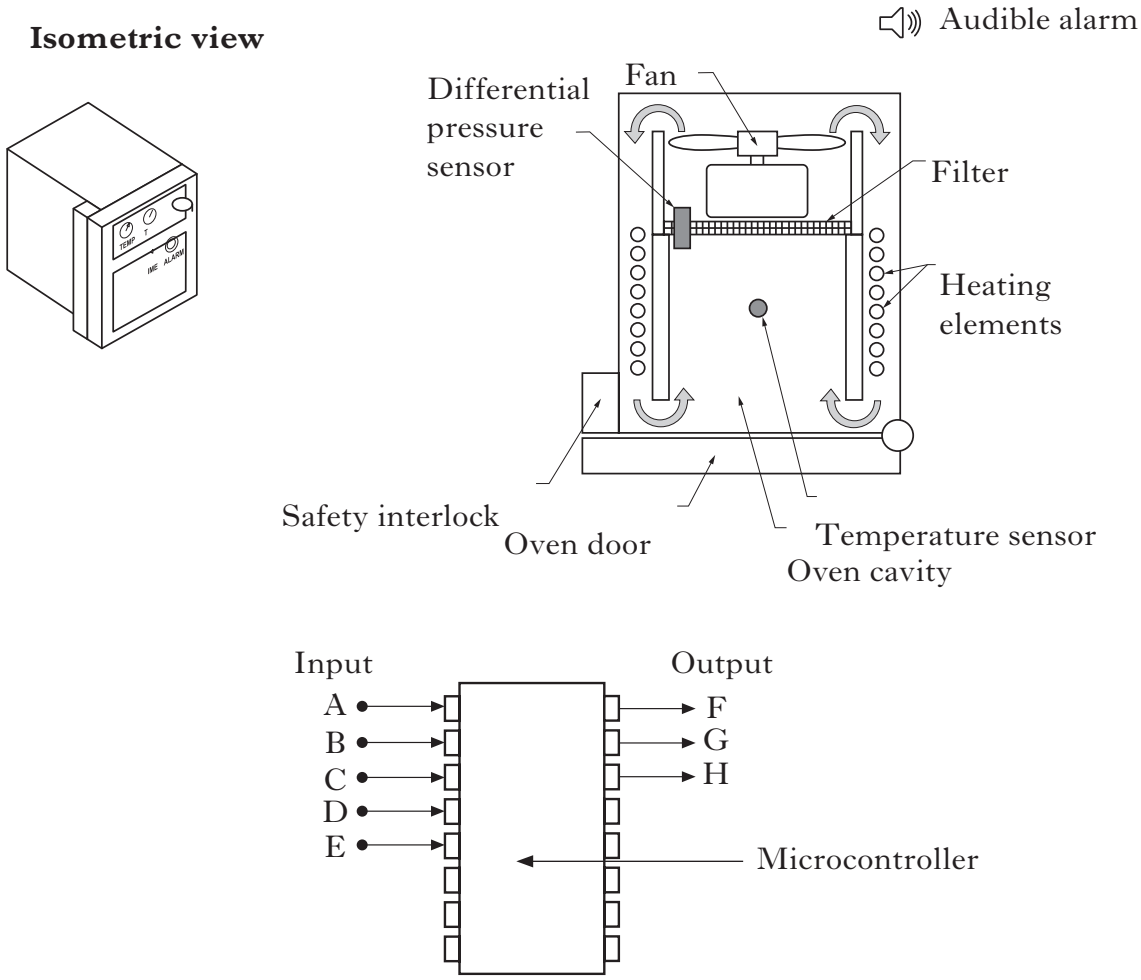

Figure Q12

- The operator inserts the bread on a tray using a wooden paddle.
- The required oven temperature and baking time are manually set.
- The Temperature sensor is used in the ON/OFF control of the Heating elements during the baking cycle.
- The fan ensures air is circulated in the oven to provide an even baking temperature.
- The Oven door has a Safety interlock to ensure that the Heating elements and Fan do not operate when the door is open. The Safety interlock works independently of the microcontroller but provides an Oven door status signal to indicate if the Oven door is open or closed.
- There is an internal air filtering system that incorporates a differential pressure sensor. When filter requires cleaning/replacement an Audible alarm is actuated but the baking operation continues until the end of its cycle to prevent interruption and loss of the product.

12. (continued)

(*a*) The baking time (Input A) and required oven temperature (Input B) are inputs to the system. *Marks*

(i) Identify and allocate the remaining input signals that require interfacing to the microcontroller in Figure Q12.

The Audible alarm (Output F) is an output of the system.

(ii) Identify and allocate the remaining output signals that require interfacing to the microcontroller in Figure Q12. **5**

(*b*) Sketch a flowchart that shows how the ON/OFF decision is made for the control of the heating elements during one cycle of operation of the temperature controlling process. The flowchart should start with "read oven temperature" and should use the signals:

- required oven temperature;
- measured oven temperature. **4**

Note: the inserted Flowchart Symbol sheet Q5/Q11/Q12/Q13, gives a suitable selection of Flowchart Symbols.

(*c*) The graph in Figure Q12(*c*) shows how the Oven temperature varies during the operation of the ON/OFF heater control cycle.

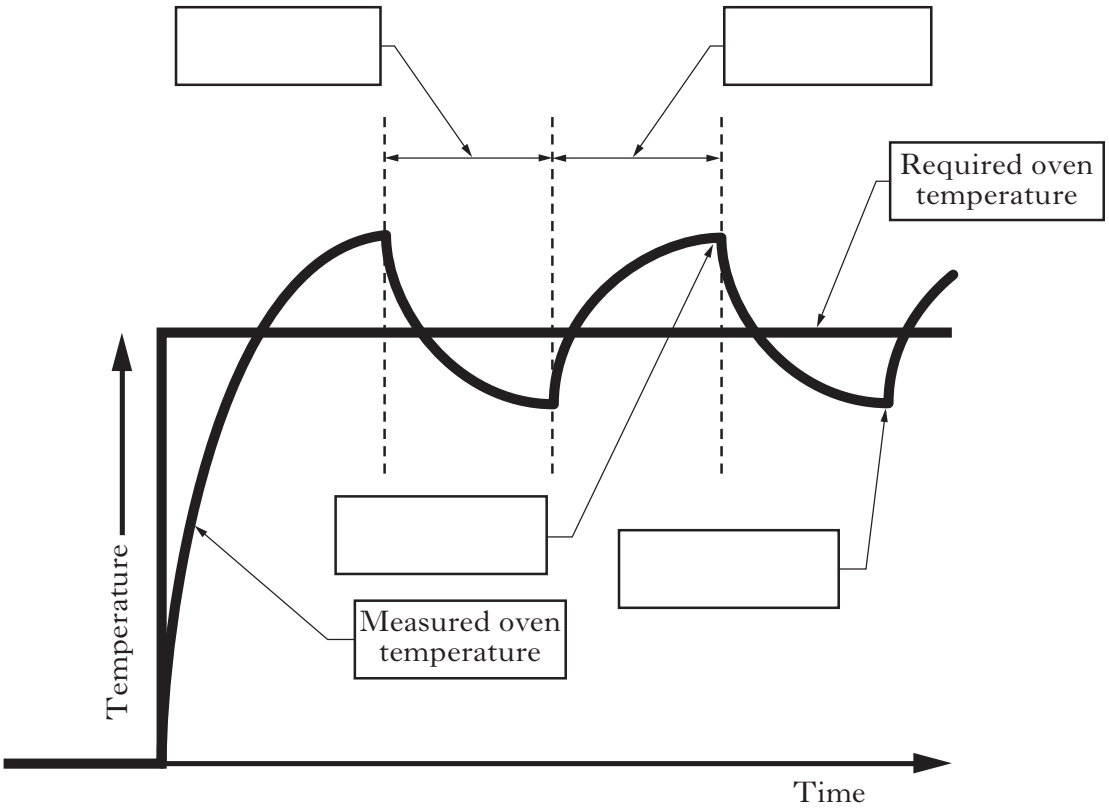

Figure Q12(*c*)

On the diagram in **Worksheet Q12(*c*)**, insert the appropriate letter in each blank label box from the list below.

A Heaters ON time
B Heaters OFF time
C Maximum temperature level reached during ON/OFF cycle
D Minimum temperature reached during ON/OFF cycle **2**

Marks

12. (continued)

(*d*) The manufacturer wishes to improve the energy efficiency of the oven when it is empty by maintaining the oven system at a standby level that prevents the system from fully cooling down. This is to be achieved by ensuring that the heating elements' energy input is reduced to 20% of full power and the fan speed is also reduced to 20% of full speed.

(i) In your answer book, briefly describe a sensing system that will reliably detect if the oven is empty. **2**

(ii) Describe **one** method of reducing the heating elements' energy input. **3**

(*e*) A thermocouple is used to sense the internal temperature of the oven. Describe with the aid of a sketch, the operation of this type of sensor. Include in your description the nature of the output signal from this type of sensor. **2**

(*f*) Sketch and briefly describe a suitable differential pressure sensor that could be used in the system to detect the filter condition. **3**

(*g*) State **two** hazards associated with this type of mechatronic system and suggest **one** possible solution for each hazard. **4**

(25)

13. Figure Q13 shows a simplified schematic diagram of an Automated packing station. The station packs six wine glasses individually into a preassembled wine glass box.

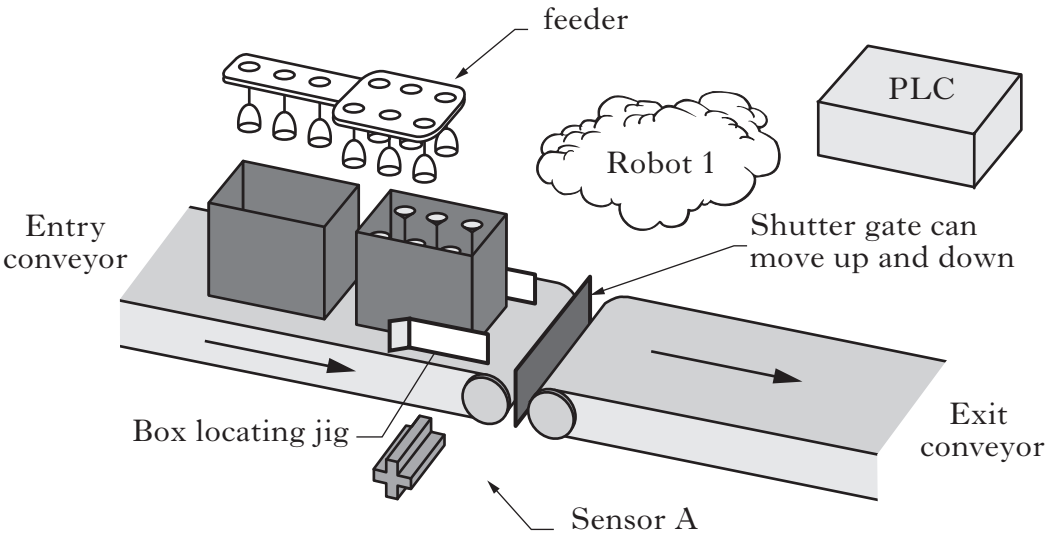

Figure Q13

The automated packing station operates as follows.

- The Exit conveyor runs continuously.
- The Entry conveyor starts and stops as required.
- An empty box arrives at the Box locating jig on the entry conveyor.
- Sensor A detects the arrival of the empty box.
- The arrival of the box at Sensor A stops the Entry conveyor and triggers the raising of the Shutter gate.
- Robot 1 loads six glasses, one at a time, from the Feeder into the box, then returns to the home position and sends a "load complete" signal to the PLC.
- The Shutter gate is lowered, the Entry conveyor starts and the loaded box moves over the shutter gate and onto the Exit conveyor.
- The fully packed box is transported away from the Automated packing station.

The system is fully automated once started. A continuous supply of glasses and boxes is provided by the glass Feeder system and the Entry conveyor respectively.

The complete system is controlled by a Programmable Logic Controller (PLC) which monitors the input and provides the output signals for the various parts of the Automated packing station.

The robot is started by a signal from the PLC and returns a "load complete" signal when it has completed loading the six glasses and has returned home.

[Turn over for Question 13 (continued) on *Page sixteen*

Marks

13. (continued)

(*a*) Sketch a flowchart that shows the operation of the Automated packing station for the **loading cycle**. Start your flowchart with a box arriving at Sensor A. **5**

Note: the inserted Flowchart Symbol sheet for Q5/Q11/Q12/Q13, gives a suitable selection of Flowchart Symbols.

(*b*) Briefly describe a suitable device for Sensor A that would detect a box arriving at the Box locating jig. **2**

(*c*) State a suitable actuator that could be used for the shutter gate on this system and give **two** reasons why you consider your chosen actuator to be a good choice. **3**

(*d*) The system is to be modified to include variable speed control of the Entry conveyor. Briefly describe:

(i) how the speed of the conveyor could be measured; **1**

(ii) the modified control strategy and the signals involved. **2**

(*e*) Suggest a suitable robot geometry for Robot 1 and justify your choice. **2**

(*f*) There is a problem with damaged glasses being packaged by the Automated packing station. Any damaged glass is to be automatically deposited in a waste bin.

Describe a suitable system that would:

(i) detect if a glass was damaged prior to packaging; **1**

(ii) enable the system to carry out disposal. **2**

(*g*) As an improvement, the robot system is to be modified to enable six glasses to be loaded at a time. Sketch and briefly describe a suitable robot end effector that would meet this requirement. **3**

(*h*) State **two** hazards associated with this Automated packing station and briefly describe how they may be addressed at the design stage. **4**

(25)

[*END OF SECTION B*]

[*END OF QUESTION PAPER*]

FOR OFFICIAL USE

X028/12/11

NATIONAL QUALIFICATIONS 2014

WEDNESDAY, 4 JUNE
9.00 AM – 12.00 NOON

MECHATRONICS HIGHER

Worksheets for Q9(*a*), Q10 and Q12(c)

Fill in these boxes and read what is printed below.

Full name of centre

Town

Forename(s)

Surname

Date of birth

Day Month Year

Scottish candidate number

Number of seat

To be inserted inside the front cover of the candidate's answer book and returned with it.

©

Worksheet Q9(*a*)

9. Table Q9(*a*) shows a selection of codes used in Mechatronic Systems.

Decimal	**Code name =**	**Code name =**
0	0000	0000 0000
1	0001	0000 0001
2	0011	0000 0010
3	0010	0000 0011
4	0110	0000 0100
5	0111	0000 0101
6	0101	
7		0000 0111
8	1100	0000 1000
9	1101	0000 1001
10	1111	0001 0000
11		0001 0001
12	1010	0001 0010
13	1011	
14	1001	0001 0100
15	1000	0001 0101

Table Q9(*a*)

(*a*) Complete Table Q9(*a*) by inserting:

(i) each of the **two** missing code names;

(ii) each of the **four** missing code values.

Worksheet Q10

10. This question consists of a series of multiple choice questions and answers for a number of mechatronic related themes. Answer the multiple choice questions by putting a tick ✓ in the correct box.

(*a*) A Thermistor is a device used to measure

A Temperature ☐
B Pressure ☐
C Flow ☐
D Force ☐
E Time. ☐

(*b*) A Rotary encoder disc is used to

A measure level ☐
B provide heat ☐
C detect motion ☐
D increase air pressure ☐
E measure flow. ☐

(*c*) A Stepper motor is used to

A measure level ☐
B provide heat ☐
C provide motion ☐
D detect pressure ☐
E count pulses. ☐

(*d*) An example of a tactile sensor is

A an electric motor ☐
B a microswitch ☐
C a thermocouple ☐
D a Light Emitting Diode ☐
E a Hall effect device. ☐

(*e*) An example of a visual indicator is

A a microswitch ☐
B a thermocouple ☐
C a pressure sensor ☐
D a Light Emitting Diode ☐
E a strain gauge. ☐

Worksheet Q12(*c*)

12. (*c*) The graph in Figure Q12(*c*) shows how the Oven temperature varies during the operation of the ON/OFF heater control cycle.

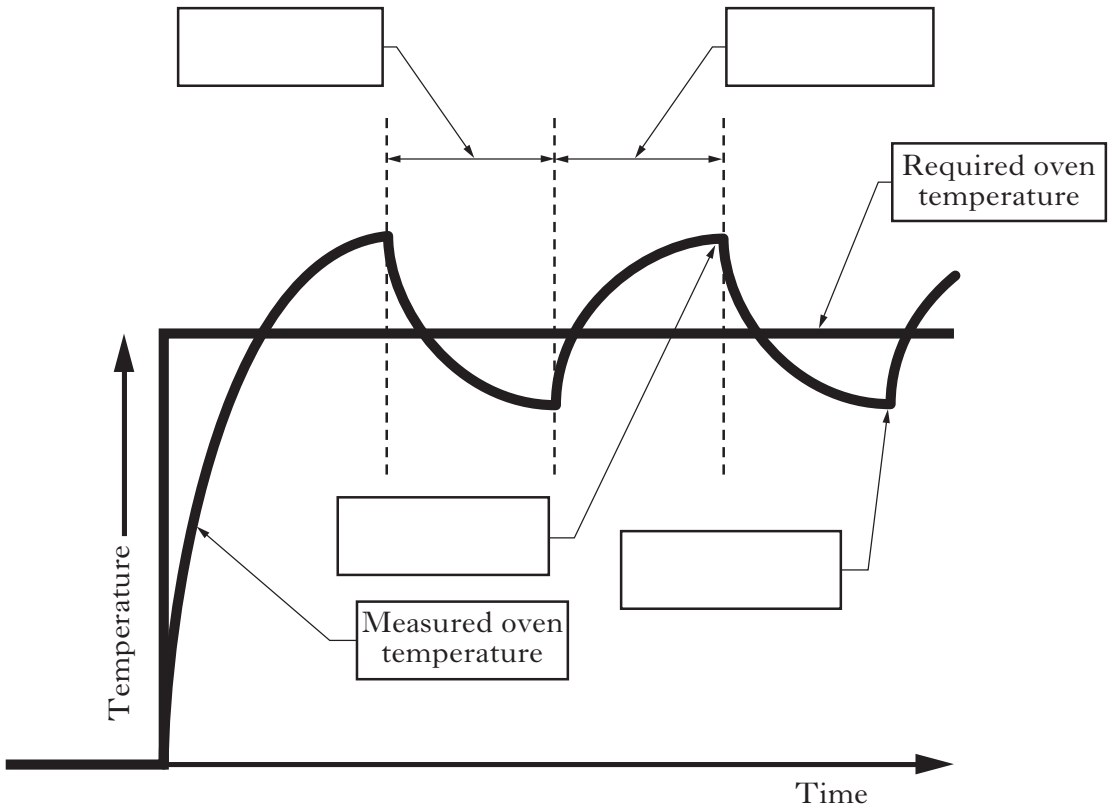

Figure Q12(*c*)

On the diagram in **Figure Q12(*c*)**, insert the appropriate letter in each blank label box from the list below.

A Heaters ON time
B Heaters OFF time
C Maximum temperature level reached during ON/OFF cycle
D Minimum temperature reached during ON/OFF cycle

[*END OF WORKSHEETS*]

PLC Datasheet Q7

PLC Programming Details for Ladder Diagram Programming

Functions

Function type	***Function symbol***	***Function name***	***Function operand (see following table)***
Input	—| |—	Normally open contact (NO)	X, Y, M, T
Input	—|/|—	Normally closed contact (NC)	X, Y, M, T
Output	—(OUT)—	Output	M, Y
Timer	—[Timer]— Timeout = ? sec	Timer	T
End	—[END]—		

Operands

Operand	***Range***	***Type***
X	0 – 7	Input (I/P) terminal contact
Y	0 – 7	Output (O/P) terminal contact
M	0 – 49	Memory/auxiliary contact
T	0 – 49	Timer

The timer functions begin a timeout for the set duration of time. When timeout occurs, the timer contact(s) are activated. If continuity of the timer rung is broken during timeout, the timeout will immediately reset.

Flowchart Symbol Sheet Q5, Q11, Q12, Q13

The following table shows a selection of Flowchart Symbols suitable for use in answering the questions.

Symbol	***Use***
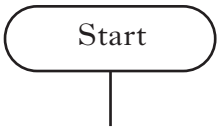	Starting Point for the flowchart
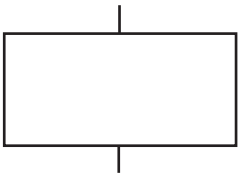	Process / Action Box
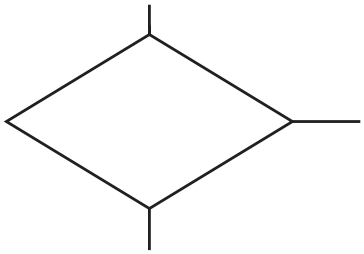	Decision Box
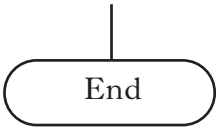	Ending Point(s) for the flowchart