FOR OFFICIAL USE

Mark

NATIONAL QUALIFICATIONS 2014

TECHNOLOGICAL STUDIES
INTERMEDIATE 2

THURSDAY, 15 MAY
1.00 PM – 3.30 PM

X0361101

X036/11/01

Fill in these boxes and read what is printed below.

Full name of centre

Town

Forename(s)

Surname

Number of seat

Date of birth
Day Month Year

Scottish candidate number

1 Answer all the questions in Section A and any **two** questions in Section B.
2 Read each question carefully before you answer.
3 Write your answers in the spaces provided.
4 **Show all working and units.**
5 Do **not** write in the margins.
6 **Do not sketch in ink.**
7 Reference should be made to the Standard Grade and Intermediate 2 Data Booklet (2008 edition) which is provided.
8 Before leaving the examination room you must give this book to the Invigilator. If you do not, you may lose all the marks for this paper.

Use blue or black ink.

X0361101

SECTION A

Attempt ALL questions (Total 60 marks)

1. A simplified block diagram for a microcontroller is shown in Figure Q1.

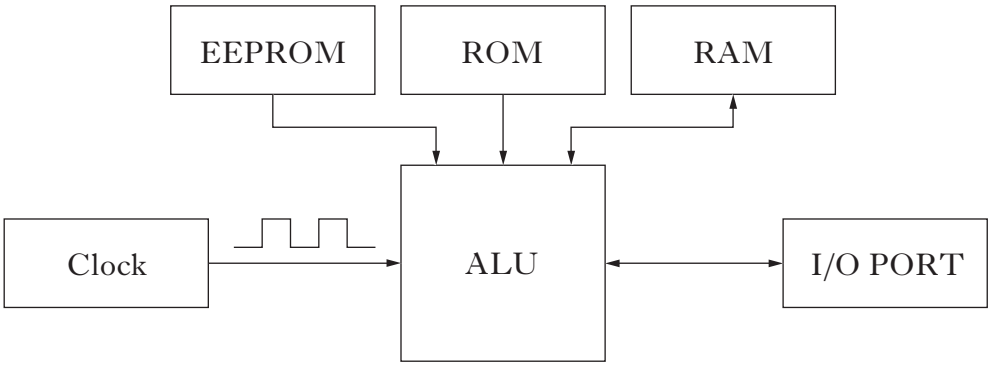

Figure Q1

Marks DO NOT WRITE IN THIS MARGIN

(*a*) (i) State the **full** name of the following microcontroller sub-systems.

ALU _____

EEPROM _____

_____ **2**

(ii) State the **function** of the following memory types used in the microcontroller.

EEPROM _____

_____

RAM _____

_____ **2**

At the initialisation stage, the inputs and outputs of the microcontroller are set.

(*b*) (i) Complete the PBASIC command below that will set only pins 7, 6, 4 and 3 as outputs.

let dirs=% _____ **1**

(ii) State what the % represents in this PBASIC command.

_____ **1**

(6)

DO NOT WRITE IN THIS MARGIN

Marks

2. The water in a hot tub has a mass of 1200 kg.

(*a*) Calculate:

(i) the heat energy required to raise the temperature from 22 °C to 26 °C. **3**

(ii) the input electrical energy to the water heater if it is 82% efficient. **2**

(iii) the current supplied to the water heater if it is rated at 230 V and the water is heated for 1 hour. **2**

The hot tub was found to have an overall efficiency of 64%.

(*b*) Describe **two** ways in which the efficiency of the hot tub could be increased.

1 _____

_____

2 _____

_____ **2**

(9)

* X 0 3 6 1 1 0 1 0 3 *

DO NOT WRITE IN THIS MARGIN

Marks

3. Part of a logic diagram used in a child's toy is shown in Figure Q3(*a*).

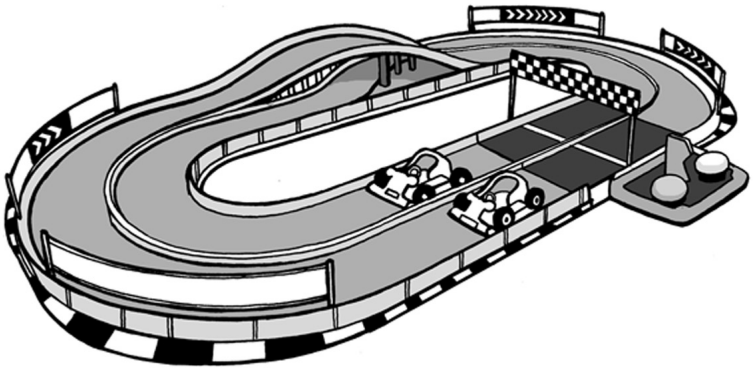

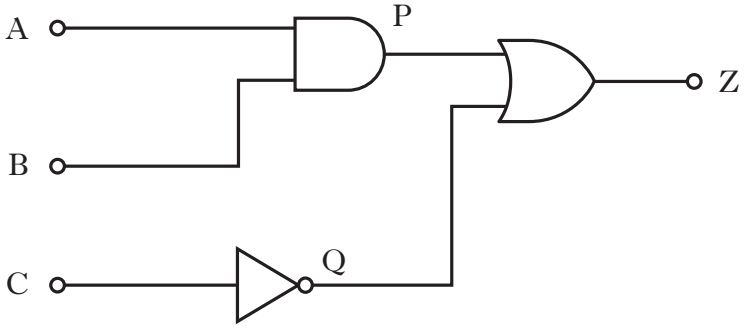

Figure Q3(*a*)

(*a*) Complete the truth table for the logic diagram shown in Figure Q3(*a*).

A	B	C	P	Q	Z
0	0	0			
0	0	1			
0	1	0			
0	1	1			
1	0	0			
1	0	1			
1	1	0			
1	1	1			

3

Marks

3. (continued)

An alternative logic diagram to control the child's toy is shown in Figure Q3(*b*).

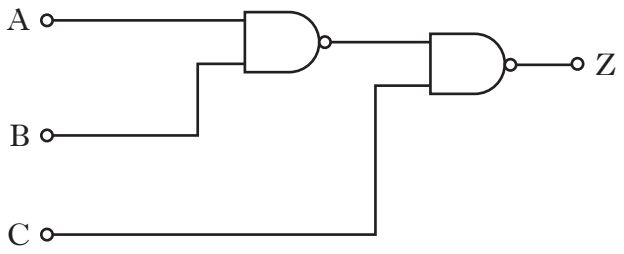

Figure Q3(*b*)

(*b*) (i) Complete, with reference to the Data Booklet, the wiring diagram below.

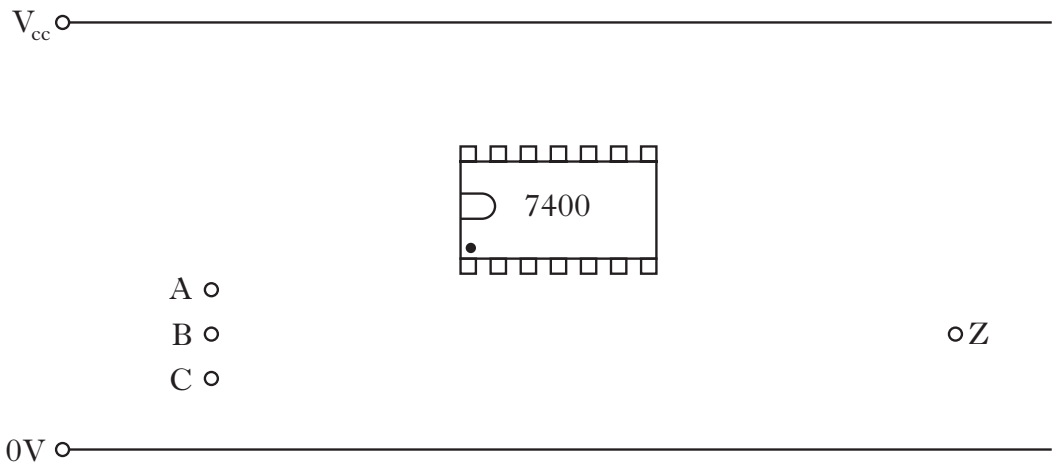

3

(ii) State the **full name** of the Integrated Circuit (IC) used in the wiring diagram.

_____ **1**

(7)

[Turn over

DO NOT WRITE IN THIS MARGIN

Marks

4. A pneumatic circuit used to crush material in a recycling system is shown in Figure Q4(*a*).

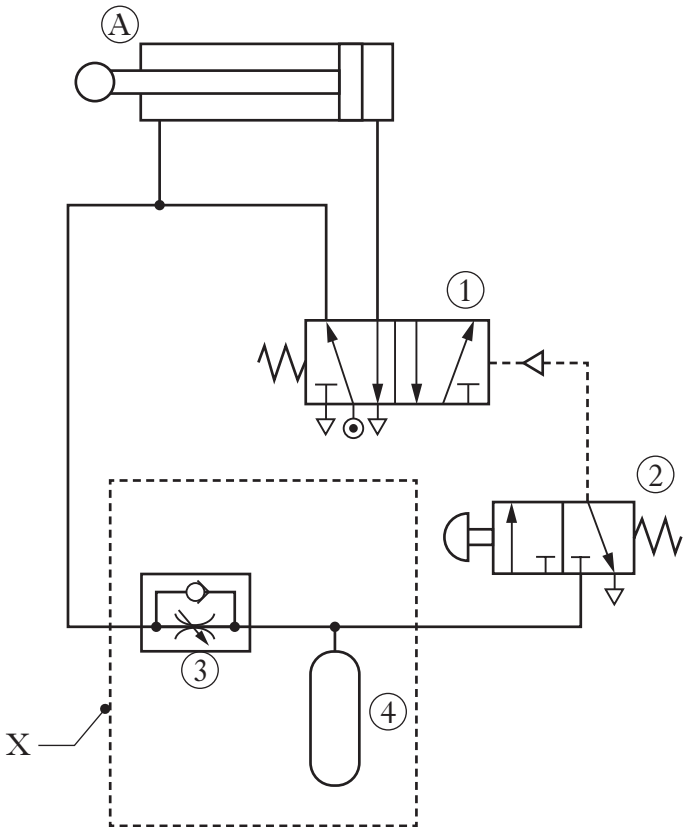

Figure Q4(*a*)

(*a*) State the full name of the following pneumatic components.

1 _____

4 _____ **2**

(*b*) Describe the function of components 3 and 4 in **sub-system X.**

_____

_____

_____ **2**

DO NOT WRITE IN THIS MARGIN

Marks

4. (continued)

The cylinder used to crush the material is shown in Figure Q4(*b*).

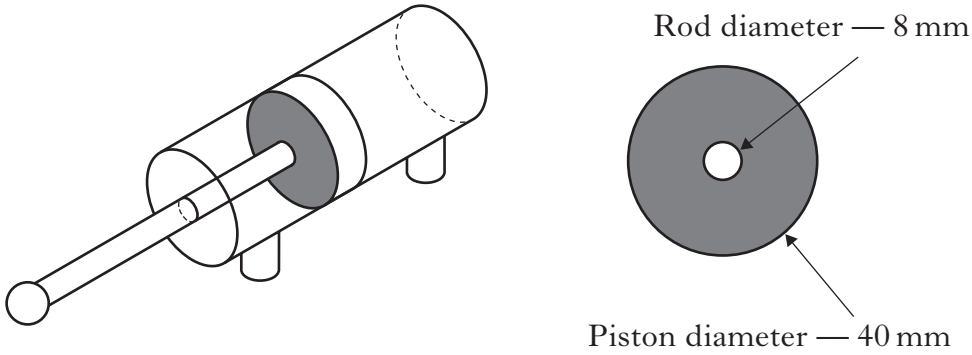

Figure Q4(*b*)

(*c*) Calculate:

(i) the effective area of the piston when it **instrokes**. **3**

(ii) the air pressure supplied to the cylinder when the instroking force is 844 N. **2**

(9)

[Turn over

DO NOT WRITE IN THIS MARGIN

Marks

5. The circuit used in an electronic game is shown in Figure Q5.

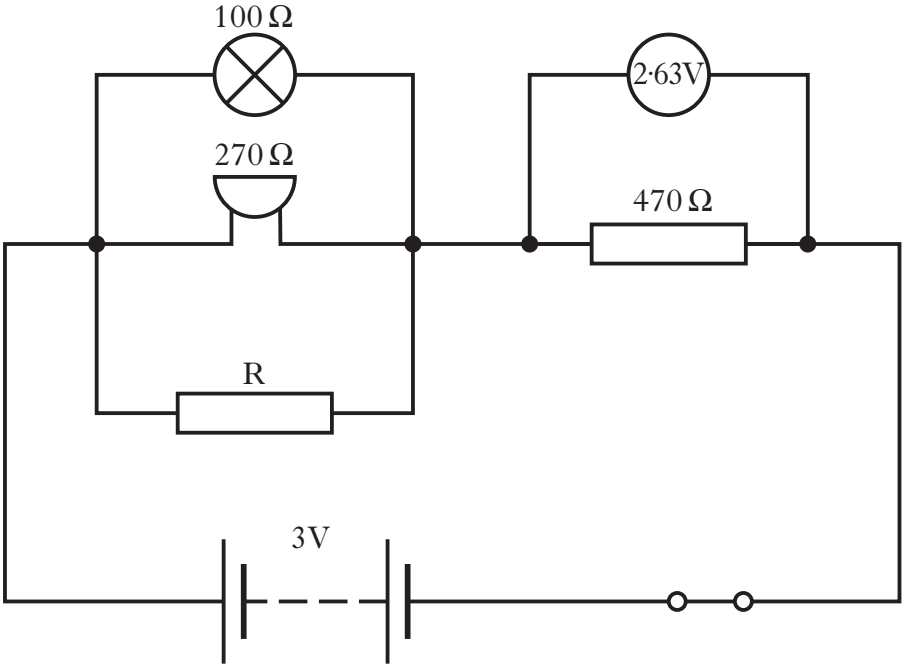

Figure Q5

(*a*) State, with reference to the Data Booklet, the resistor colour coding for the 470 Ω resistor.

_____ **1**

(*b*) Calculate:

(i) the current through the 470 Ω resistor. **2**

(ii) the total circuit resistance. **2**

DO NOT WRITE IN THIS MARGIN

Marks

5. (*b*) (continued)

(iii) the equivalent resistance of the parallel branch. **1**

(iv) the value of resistance R. (Use the formula given below). **3**

$$\frac{1}{R_T} = \frac{1}{R_1} + \frac{1}{R_2} + \frac{1}{R_3}$$

(9)

[Turn over

DO NOT WRITE IN THIS MARGIN

6. A microcontroller is used to operate a robotic arm.

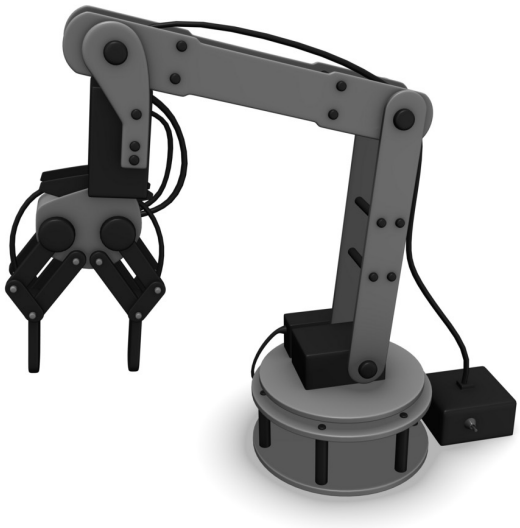

The sequence of operation for the robotic arm is shown below.

Step 1 Check if start switch is pressed.

Step 2 When start switch is pressed arm moves forward.

Step 3 After two seconds the arm stops.

Step 4 Jump to the sub-procedure "gripper".

Step 5 Once sub-procedure "gripper" is complete arm moves backward.

Step 6 After two seconds the arm stops.

Step 7 Repeat 200 times steps two to six before resetting to step one.

DO NOT WRITE IN THIS MARGIN

Marks

6. (continued)

Complete, with reference to the Data Booklet, the flowchart for the robotic arm operation.

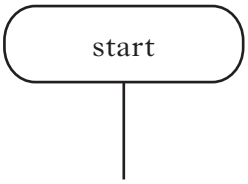

(8)

DO NOT WRITE IN THIS MARGIN

Marks

7. Two children on a rope climb are shown in Figure Q7.

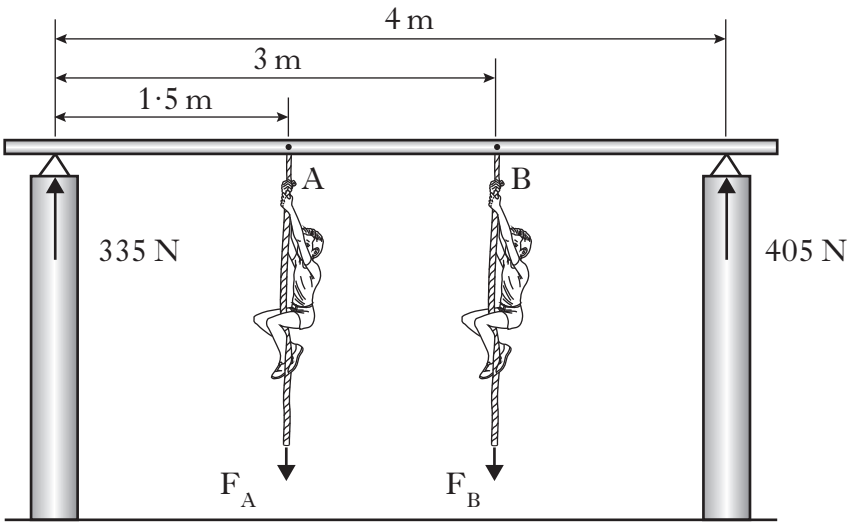

Figure Q7

(*a*) Draw a freebody diagram for the rope climb shown in Figure Q7. **2**

DO NOT WRITE IN THIS MARGIN

Marks

7. (continued)

(*b*) Calculate:

(i) the force F_A. (Take moments about Point B) **3**

(ii) the force F_B. **2**

(7)

[Turn over

DO NOT WRITE IN THIS MARGIN

Marks

8. A control system is used to maintain the output temperature of a hair dryer.

(*a*) Complete the control diagram below for the operation of the hairdryer.

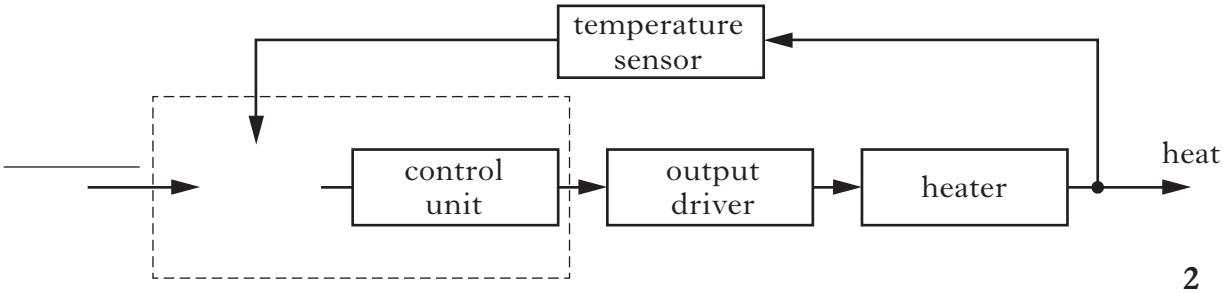

2

(*b*) Describe, using appropriate terminology, the operation of the control system.

_____

_____

_____

_____

_____

_____ **3**

(5)

[*END OF SECTION A*]

[Turn over for SECTION B on *Page sixteen*

SECTION B

Attempt any TWO questions (Total 40 marks)

9. A microcontroller is used to operate a garage door. The flowchart for the sub-procedure used to close the door and the input and output connections are shown in Figure Q9(*a*).

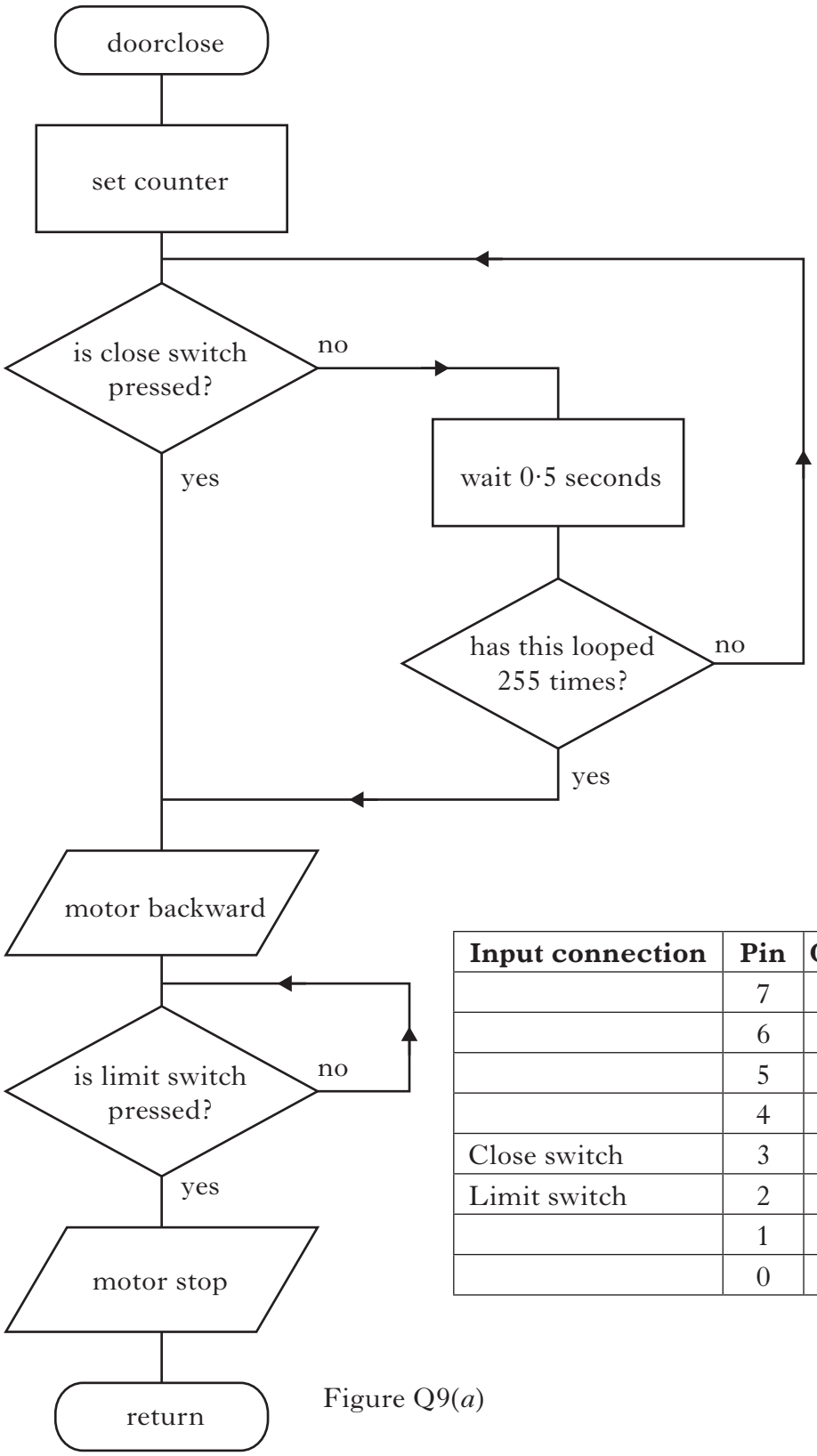

Input connection	Pin	Output connection
	7	motor backward
	6	
	5	
	4	
Close switch	3	
Limit switch	2	
	1	
	0	

Figure Q9(*a*)

DO NOT WRITE IN THIS MARGIN

Marks

9. (continued)

(*a*) Complete, with reference to the flowchart, input/output connections and Data Booklet, the PBASIC program for the sub-procedure doorclose.

doorclose:

8

[Turn over

DO NOT WRITE IN THIS MARGIN

9. (continued) *Marks*

When the door opens the speed of the motor is controlled by PWM.

(*b*) (i) State the **full** name of this method of speed control.

_____ **1**

(ii) Complete Figure Q9(*b*) to show how PWM could be used to make a motor rotate at **half** of its full speed.

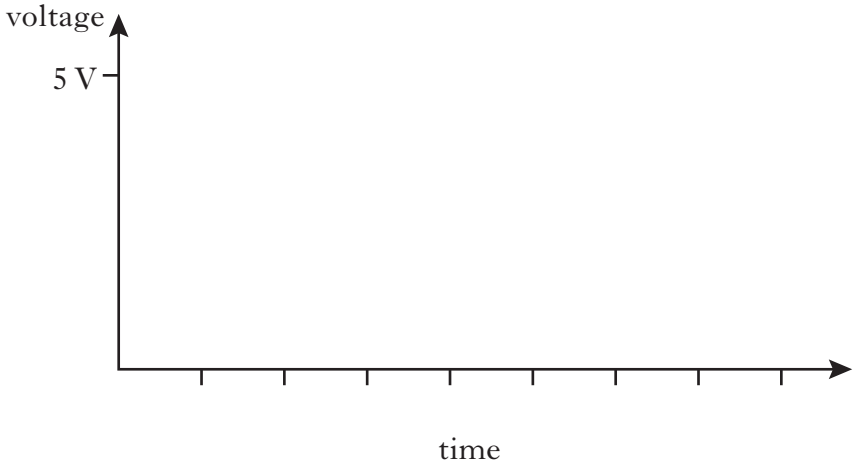

Figure Q9(*b*) **2**

(iii) State **one** advantage of using this method of speed control.

_____ **1**

9. (continued)

DO NOT WRITE IN THIS MARGIN

Marks

The drive system for the door is shown in Figure Q9(*c*).

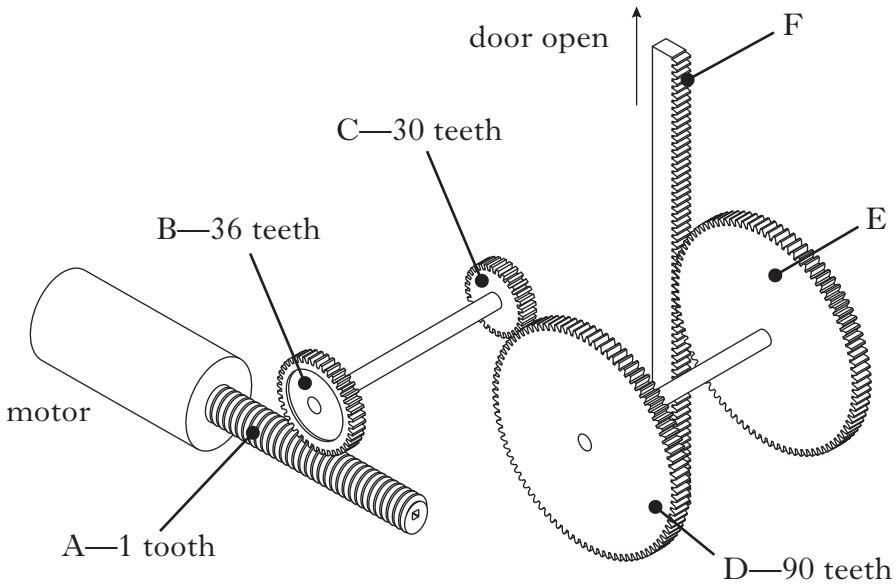

Figure Q9(*c*)

(*c*) Calculate the speed of **gear D** when the motor rotates at 2000 rev/min. **4**

(*d*) (i) State the name of **gear A**.

_____ **1**

(ii) State **one** advantage of using **gear A** to control the movement of the door.

_____ **1**

(iii) State the name of mechanisms E and F.

_____ and _____. **2**

(20)

10. A parcel slides down a chute at the end of a conveyor system. A spring loaded buffer is positioned to protect the parcel when it reaches the bottom as shown in Figure Q10(*a*).

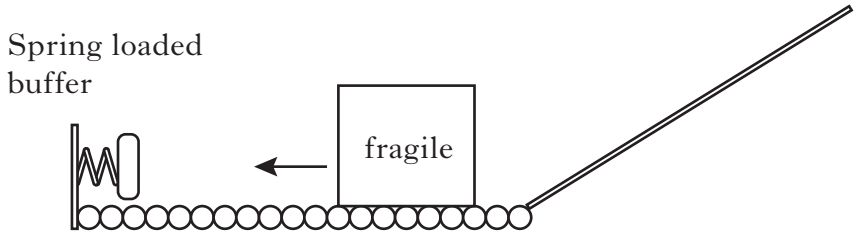

Figure Q10(*a*)

The parcel has a mass of 25 kg and has a velocity of 0·5 m/s when it hits the buffer.

(*a*) Calculate:

(i) the kinetic energy of the parcel. **2**

(ii) the force exerted on the spring if it is compressed by 0·08 m. (Assume no loss of energy.) **3**

In operation it was found that not all the energy was transferred to the buffer.

(*b*) (i) State **one** form of energy that will be lost. **1**

_____

(ii) State the advantage of having an energy loss within **this** system. **1**

_____

_____

DO NOT WRITE IN THIS MARGIN

Marks

DO NOT WRITE IN THIS MARGIN

Marks

10. (continued)

A wiring diagram for a digital electronic circuit used in the operation of the conveyor system is shown in Figure Q10(*b*).

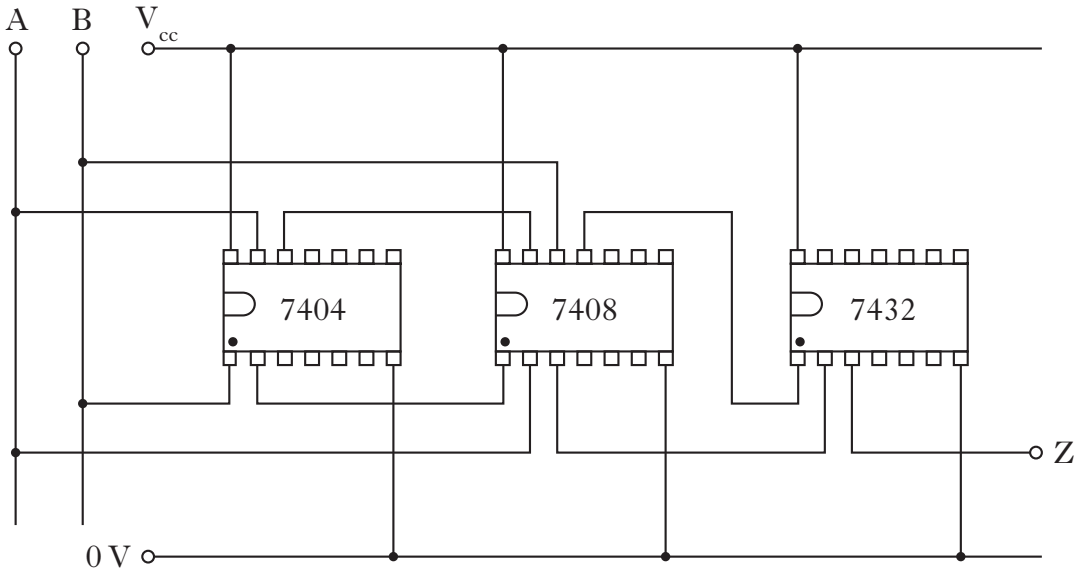

Figure Q10(*b*)

(*c*) (i) Complete the logic diagram below with reference to the Data Booklet and Figure Q10(*b*).

3

(ii) Write the Boolean equation for output Z, in terms of inputs A and B.

Z = _____ **3**

10. (continued)

Marks

DO NOT WRITE IN THIS MARGIN

An alternative electronic circuit was designed using the CMOS Integrated Circuit (IC) family.

(*d*) State, for this IC family:

(i) the maximum operating voltage.

_____ **1**

(ii) one disadvantage compared to the TTL family.

_____ **1**

An LED is used in the conveyor system to show when it is in operation.

(*e*) Complete the circuit shown in Figure Q10(*c*) that will allow an LED to indicate when the conveyor is in operation.

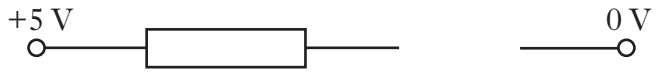

Figure Q10(*c*) **2**

A DPDT switch is used in the conveyor system to control the direction of the motor.

(*f*) (i) State the full name of this type of relay.

_____ **1**

(ii) Complete the wiring of the DPDT switch shown below so that the motor can operate in both forward **and** reverse directions.

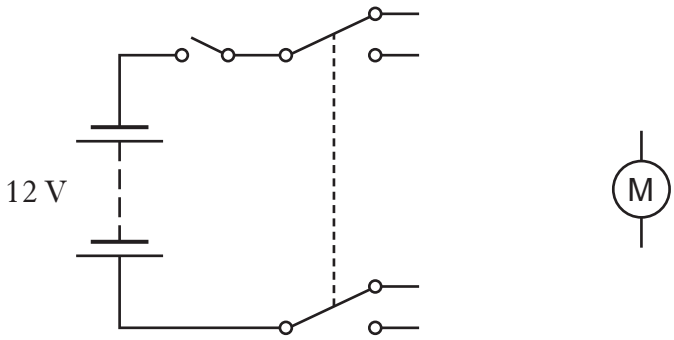

2

(20)

[Turn over for Question 11 on *Page twenty-four*

11. A pneumatic circuit for a stamping system to press mechanical parts out of a sheet of metal is shown in Figure Q11(*a*).

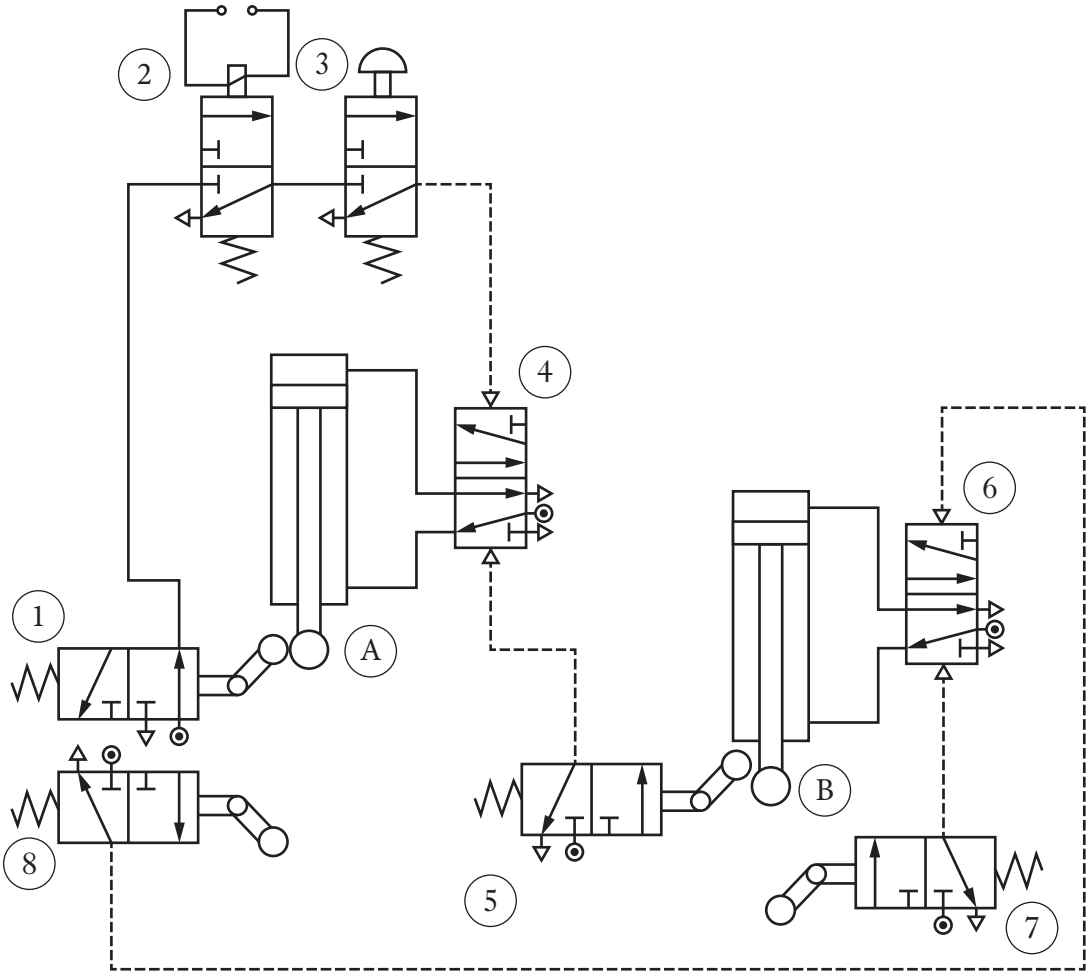

Figure Q11(*a*)

DO NOT WRITE IN THIS MARGIN

Marks

11. (continued)

(*a*) (i) State the name of the **actuator** on the following valves.

(2) _____, spring return

(3) _____, spring return **2**

(ii) State the type of control created by valves (2) and (3).

_____ **1**

The pneumatic circuit shown in Figure Q11(*a*) uses sequential control.

(*b*) Describe what is meant by sequential control.

_____ **1**

(*c*) Describe, using appropriate terminology, the operation of the stamping system.

When valve (2) is actuated _____

_____

_____

_____

_____

_____

_____

_____

_____ **6**

[Turn over

11. (continued)

Marks

DO NOT WRITE IN THIS MARGIN

The sensing circuit used to detect if a sheet of metal is in place is shown in Figure Q11(*b*).

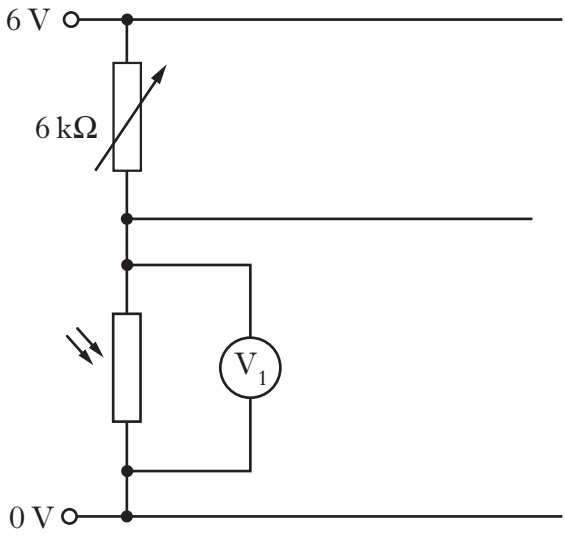

Figure Q11(*b*)

(*d*) (i) State, with reference to the Data Booklet, the resistance of the LDR at a light level of 20 lux.

_____ **1**

(ii) Calculate the voltage V_1 for this light level. **2**

11. (continued)

Marks

DO NOT WRITE IN THIS MARGIN

The circuit used to actuate the pneumatic valve (2) is shown in Figure Q11(*c*).

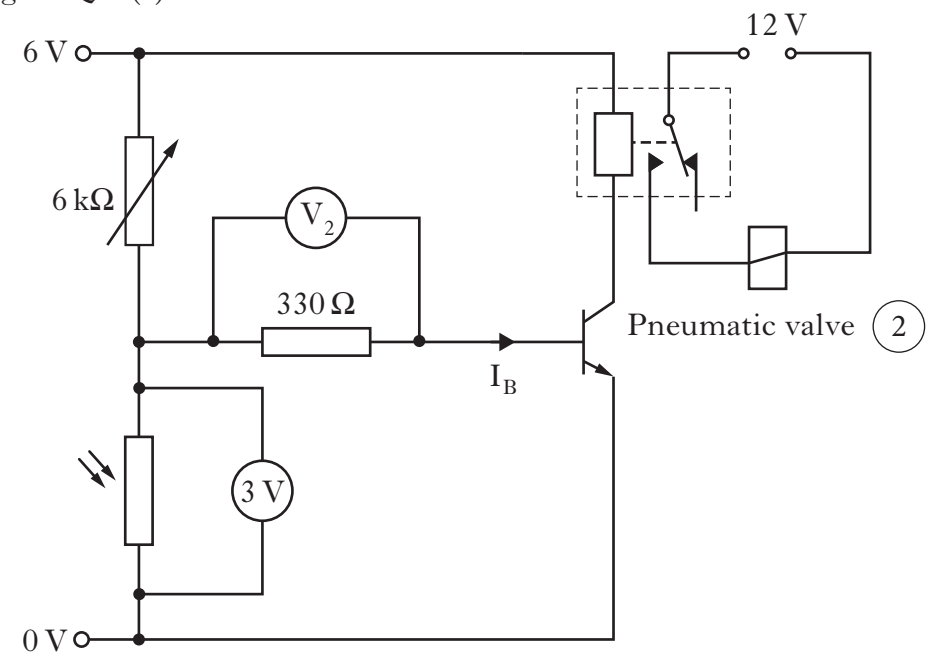

Figure Q11(*c*)

(*e*) (i) Complete the circuit shown in Figure Q11(*c*) to include the symbol for a diode to protect the transistor. **2**

(ii) State the **function** of the variable resistor in the circuit.

_____ **1**

As the light level dropped, V_1 across the LDR is 3 V and the transistor is saturated.

(*f*) Calculate:

(i) the voltage shown on V_2. **2**

[Turn over

11. (*f*) (continued)

DO NOT WRITE IN THIS MARGIN

Marks

(ii) the base current, I_B. **2**

(20)

[*END OF SECTION B*]

[*END OF QUESTION PAPER*]

ADDITIONAL SPACE FOR ANSWERS

DO NOT WRITE IN THIS MARGIN

ADDITIONAL SPACE FOR ANSWERS

Marks DO NOT WRITE IN THIS MARGIN

ADDITIONAL SPACE FOR ANSWERS

Marks DO NOT WRITE IN THIS MARGIN

ACKNOWLEDGEMENTS

Question 2 – 107333861 Shutterstock.com

Question 6 – 37616218 Shutterstock.com

Question 8 – 47713624 Shutterstock.com