X036/13/01

NATIONAL QUALIFICATIONS 2015

TUESDAY, 12 MAY
1.00 PM – 4.00 PM

TECHNOLOGICAL STUDIES
ADVANCED HIGHER

200 marks are allocated to this paper.

Answer **all** questions in Section A (120 marks).

Answer **two** questions from Section B (40 marks each).

Where appropriate, you may use sketches to illustrate your answer.

You should plan assembler code programs using a flowchart or other suitable method.

Reference should be made to the Advanced Higher Data Booklet (2008 edition) which is provided.

Marks

SECTION A

Attempt ALL the questions in this Section. (Total 120 marks)

1. The machine shown in Figure Q1 is used to test the durability of furniture. A piston applies a force to an item of furniture over a large number of repetitions, called cycles.

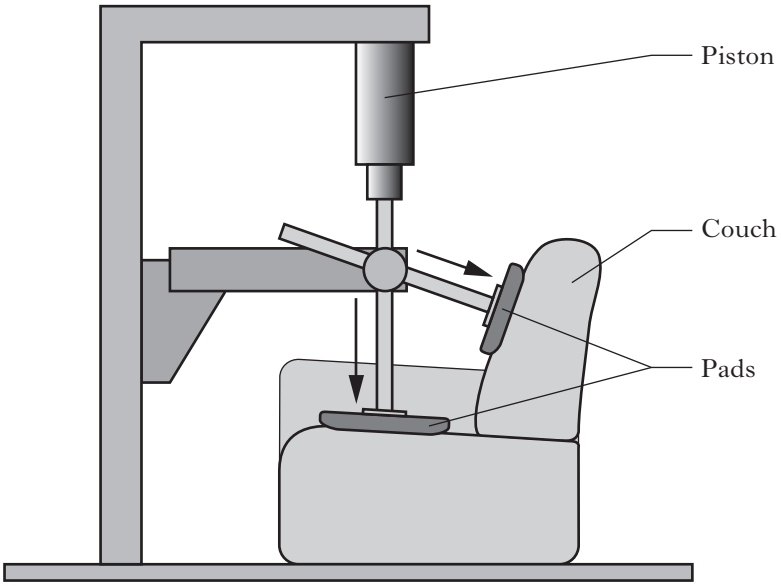

Figure Q1

The number of cycles is measured by a signal from a sensor mounted on the cylinder. This produces two digital pulses every cycle. The total number of pulses has to be divided by two to count the number of complete cycles.

(*a*) Draw a circuit for a divide-by-2 counter, using a D-type bistable. **2**

Worksheet Q1 shows an incomplete 4-bit counter.

(*b*) On **Worksheet Q1** complete a 4-bit counter which counts **down** from 12 to 0. **6**

A 4-bit counter can count from 0 to 15 cycles.

(*c*) Determine how many bits would be required to count from 0 to 1023 cycles. **2**

(10)

Marks

2. The Computerised Tomography (CT) scanner shown in Figure Q2 uses a motorised table to position a patient correctly to allow an x-ray image to be taken.

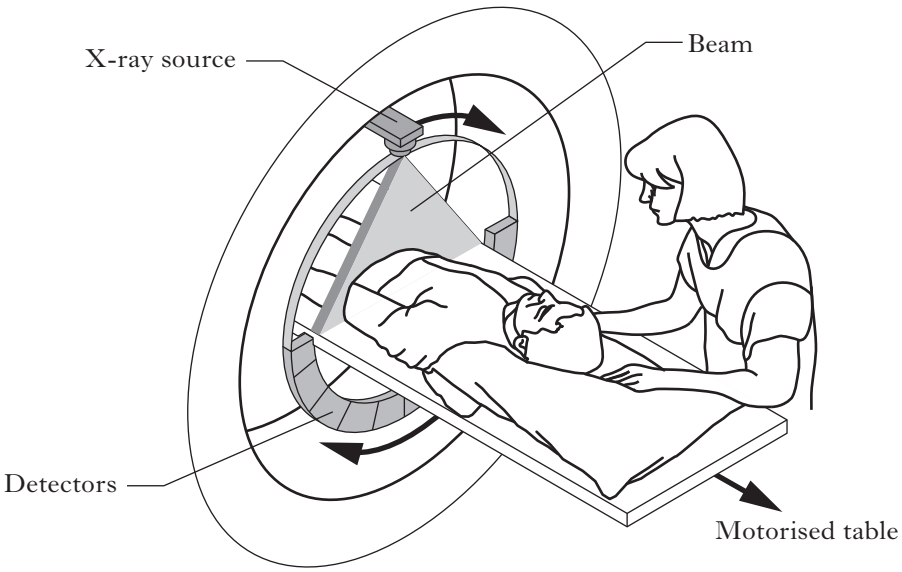

Figure Q2

A Proportional-Integral-Derivative (PID) control system is used to ensure that the motorised table moves accurately to a new position.

(*a*) On **Worksheet Q2** sketch a graph of the response of the table when moving from an initial table position of 500 mm to 520 mm:

(i) Using only Proportional (P) control (with low gain); **2**

(ii) Using Proportional and Integral (PI) control only; **2**

(iii) Using Proportional, Integral and Derivative (PID) control. **2**

(*b*) Explain why, where very accurate positioning is required, PID control is better than either P or PI control. **3**

(9)

[Turn over

Marks

3. A Structural Engineering student is investigating the bending stress induced by the self-weight of a solid mild-steel beam. The cross-sectional dimensions (in mm) are shown in Figure Q3(*a*)

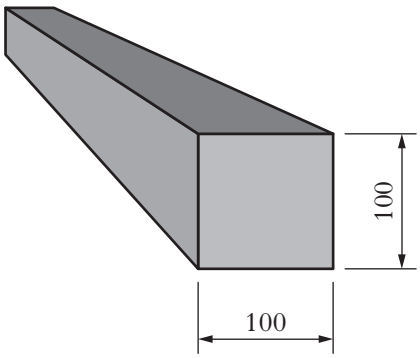

Figure Q3(*a*)

The self-weight of the beam can be considered to be a uniformly-distributed load (UDL) as shown in Figure Q3(b). The beam is **simply supported** at its ends.

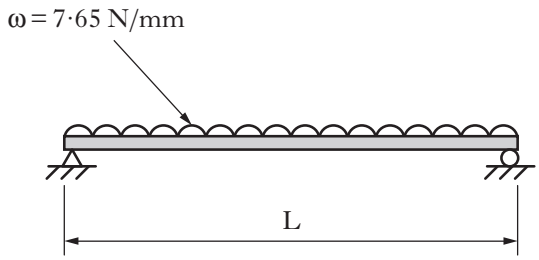

Figure Q3(*b*)

(*a*) Calculate the maximum allowable length, L, of the beam before the **yield stress** due to bending is reached. **10**

(*b*) Calculate the radius of curvature of the beam for its maximum allowable length, L. **3**

The student decides to replace the solid beam by a **hollow** beam with identical external cross-sectional dimensions to those shown in Figure Q3(*c*). This beam is also made from mild steel.

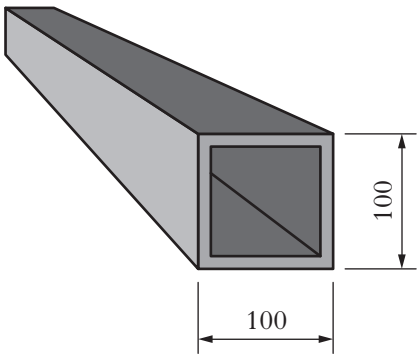

Figure Q3(*c*)

(*c*) Explain why the hollow beam shown in Figure Q3(*c*) can span further than the solid beam shown in Figure Q3(*a*). **2**

(15)

Marks

4. The manufacturer of the prototype microwave oven shown in Figure Q4 is developing a microcontroller-based user-interface for the product. It must accept an analogue input from a dial and digital inputs from 10 push-buttons. The settings and times selected are saved and displayed on an LCD screen. The microcontroller must also provide digital outputs for a "magnetron", a bleeper and the turntable motor.

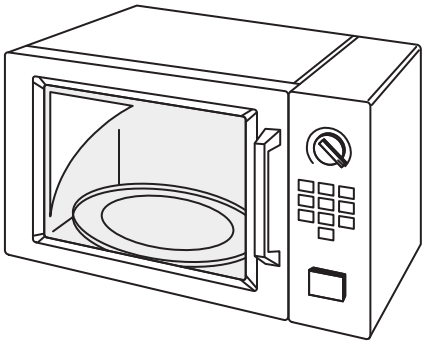

Figure Q4

A product developer identifies the features necessary for a prototype microcontroller to control the oven.

(*a*) State **six** features that a suitable microcontroller must have for this application. **6**

The developer carries out four steps in producing an assembler-code program for the prototype.

(*b*) Describe these steps, identifying any software or hardware used. **6**

(12)

5. A road-maintenance company is considering installing the flashing "Ice Alert" warning-lamp system shown in Figure Q5 on the approach to a dangerous bridge.

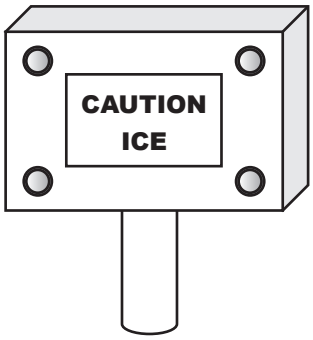

Figure Q5

A proposed circuit is shown on **Information Sheet Q5**.

(*a*) Describe the operation of the circuit in terms of sub-systems A, B, C, D and E in the circuit shown on **Information Sheet Q5**. **11**

(*b*) State **two** general disadvantages associated with sub-system E. **2**

(13)

6. The 4x4 vehicle shown in Figure Q6(*a*) is fitted with a traction-control system. Traction control diverts more engine power to a wheel that has good grip on the surface, and less power to a spinning wheel that has less grip.

Figure Q6(*a*)

On each axle, the rotational speed of the left wheel is compared with the rotational speed of the right wheel. If there is a discrepancy (error), between the wheel speeds, the faster wheel is braked with a brake actuator. This provides more traction to the slower wheel. The brake actuators of the traction-control system are controlled by an 8-bit microcontroller. Figure Q6(*b*) shows the microcontroller's PORT B connections.

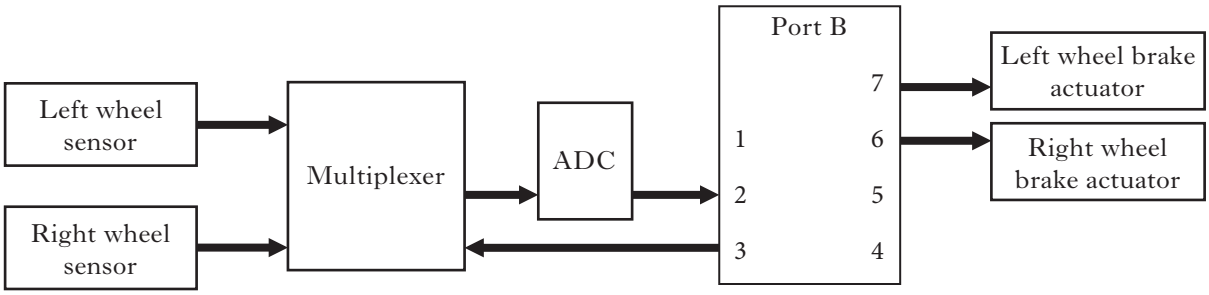

Figure Q6(*b*)

The sequence of the control program *main* is as follows.

- Pin 3 is set low to select the left wheel speed sensor.
- Prewritten sub-procedure *adcread* is called. This returns the speed value in W.
- The speed value is then stored in LEFTSPEED.
- Pin 3 is set high to select the right wheel speed sensor.
- Prewritten sub-procedure *adcread* is called again and returns the speed value in W.
- The speed value is then stored in RIGHTSPEED.
- RIGHTSPEED is subtracted from LEFTSPEED and the result stored in W.
- If W is zero, no action is taken and the program loops back to the beginning.
- If W is not zero, the faster wheel is braked using PWM by calling either sub-procedure *brakeleft* or *brakeright*.
- The program loops continuously.

(*a*) Write, in assembler code, the program *main*. **14**

Note: The register files LEFTSPEED and RIGHTSPEED have been defined. The prewritten sub-procedure *pause* produces a time delay of 1 ms multiplied by the value in the Working Register, W.

Sub-procedures *brakeleft* and *brakeright* are shown on **Worksheet Q6**.

(*b*) On **Worksheet Q6**, explain how the traction-control system functions. Use the blank spaces provided. Refer also to Figure Q6(*b*). **8**

(22)

Marks

7. A student is experimenting with data transfer using a SIPO shift register.

(*a*) State the full name for which SIPO is an abbreviation. **1**

The student's circuit is shown in Figure Q7.

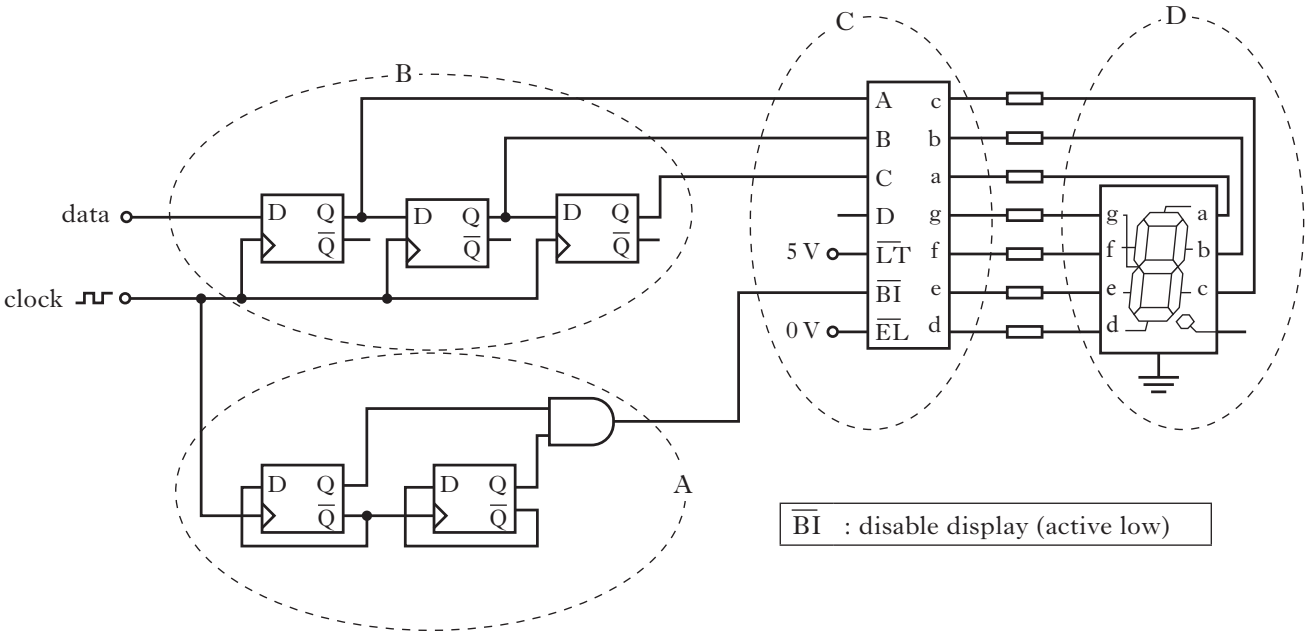

Figure Q7

(*b*) Explain the operation of the circuit in terms of sub-systems A to D. **10**

(11)

[Turn over

Marks

8. The bicycle crank shown in Figure Q8(*a*) is to be subjected to a static test in the position shown. The crank is 210 mm long and has a load of 2500 N applied as shown.

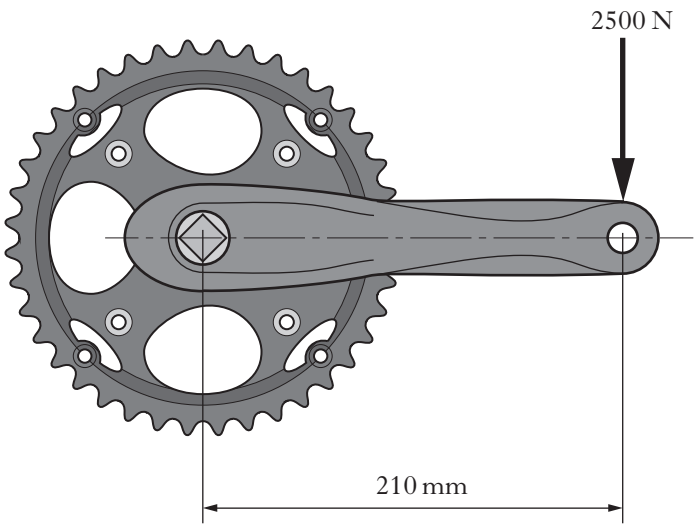

Figure Q8(*a*)

The cross-section of the crank is shown in Figure Q8(*b*).

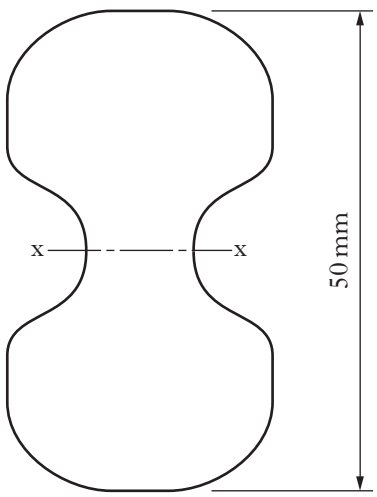

Figure Q8(*b*)

The second moment of area (I) about axis x-x is 260 000 mm^4.

The crank can be considered to be a cantilever loaded as shown in Figure Q8(*a*).

(*a*) Calculate the maximum stress due to bending. **6**

The crank is made from aluminium alloy.

(*b*) Calculate the deflection at the point of application of the load. **4**

(10)

9. The lorry cornering as shown in Figure Q9(*a*) uses a device called an inclinometer, which provides an analogue voltage signal proportional to the angle of tilt.

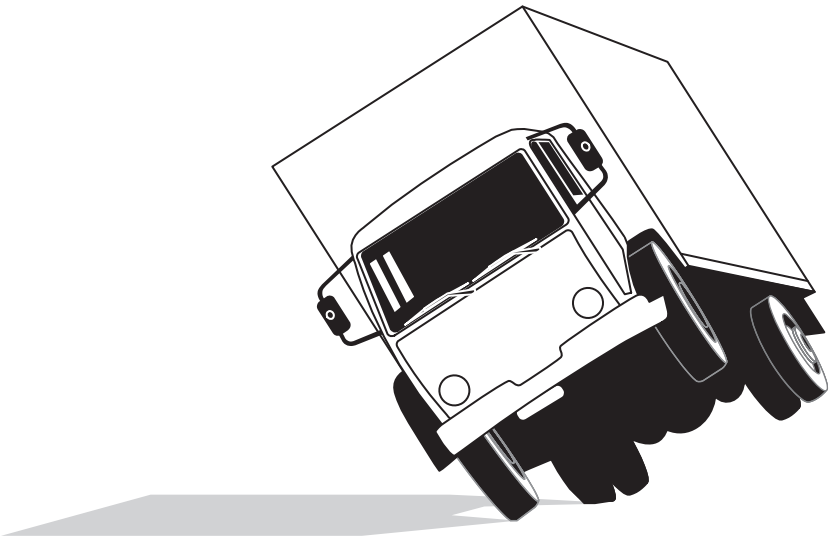

Figure Q9(*a*)

The signal is processed by the electronic circuit shown in Figure Q9(*b*).

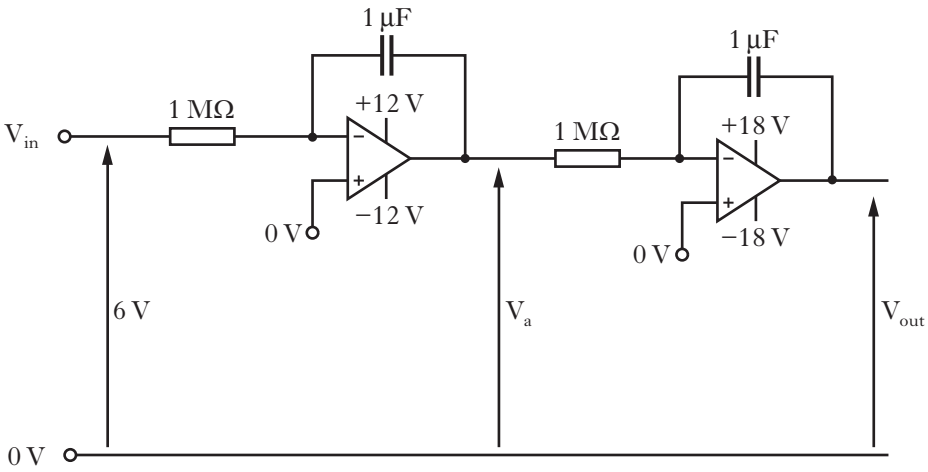

Figure Q9(*b*)

(*a*) State, in its simplest form, the equation for V_a in terms of the values shown in Figure Q9(*b*). Show all working. **4**

(*b*) State, in its simplest form, the equation for V_{out} in terms of the values shown in Figure Q9(*b*). Show all working. **4**

(*c*) On **Worksheet Q9**, complete the table. Assume that the op-amps are perfect. **5**

(*d*) On **Worksheet Q9**, plotting at 0·5 s intervals:

(i) draw the graph of V_a; **2**

(ii) draw the graph of V_{out}. **3**

(18)

[*END OF SECTION A*]

SECTION B

Attempt any TWO questions in this Section.

Each question is worth 40 marks *Marks*

10. The conveyer belt shown in Figure Q10(*a*) moves at a steady speed. Boxes of fish are fed onto the belt and move through a packaging area one at a time. The progress of a box through each zone is monitored by a series of light sensors.

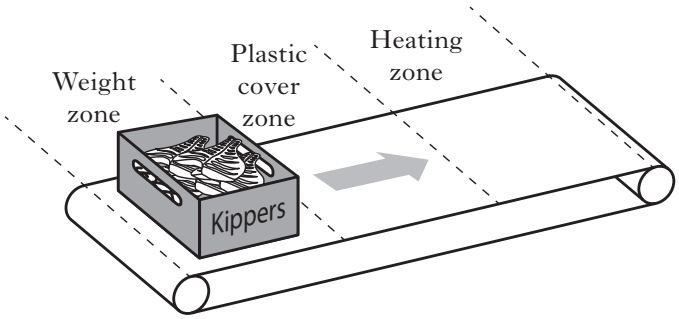

Figure Q10(*a*)

Each of the process zones is initiated in turn, as the light beams are broken in sequence.

The circuit shown in Figure Q10(*b*) provides signals to clock a 3-bit counter. The count value is then processed by a logic array to control the outputs used in the packaging process.

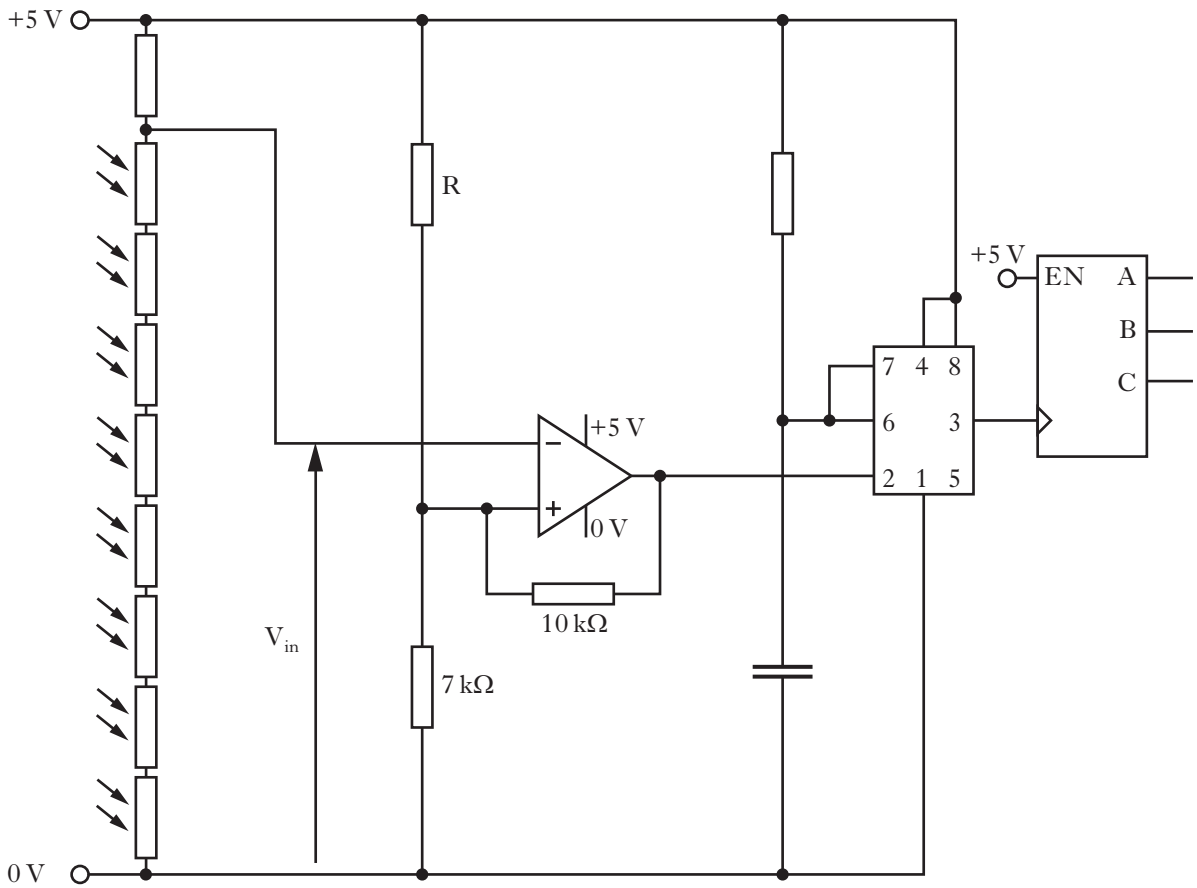

Figure Q10(*b*)

When a fish box breaks one of the beams, V_{in} = 3 V and pin2 of the 555 timer goes low.

(*a*) Explain how the circuit in Figure Q10(*b*) operates to clock the 3-bit counter. **6**

(*b*) Calculate the minimum required value of resistor R. **5**

10. continued

The counter controls three outputs in sequence as follows: the box is weighed to determine the label information; a plastic sheet is fitted over the open top of the box; a heater shrinks the plastic to seal the box. The table below shows the sequence of outputs controlled by the 3-bit counter as it counts up.

A	B	C	Weight actuator (W)	Plastic cover actuator (P)	Heater (H)
0	0	0	1	0	0
1	0	0	1	0	0
0	1	0	0	1	0
1	1	0	0	1	0
0	0	1	0	1	0
1	0	1	0	0	1
0	1	1	0	0	1
1	1	1	0	0	1

(*c*) Write a Boolean expression for the Heater (H) in terms of inputs A, B and C. **3**

(*d*) Complete **Worksheet Q10** showing the required logic array to control the Heater. **4**

The sequential logic control system is to be replaced by a microcontroller. A sub-procedure *pack* operates as follows: when the weight sensor goes high the weight actuator is pulsed on and off at 20 Hz for 0·5 second. When the plastic-cover sensor goes high the plastic-cover actuator is "soft stopped" by halving the initial MARK time and doubling the initial SPACE time in a six-times repeated loop. Assume MARK and SPACE have appropriate initial values.

Input	PORTB pins	Output
	7	Weight-sensing actuator
	6	Plastic-cover actuator
	5	Heater
Weight sensor	2	
Plastic-cover sensor	1	
Heater sensor	0	

Note: The sub-procedure *pause* creates a delay of 1 ms multiplied by the value in the Working Register, W, before the procedure is called. The register files COUNT, MARK and SPACE have been set up and TRISB has been initialised.

(*e*) Write, in assembler code, the sub-procedure *pack* as described. **22**

(40)

Marks

11. The rollercoaster ride shown in Figure Q11(*a*), is to be safety-tested.

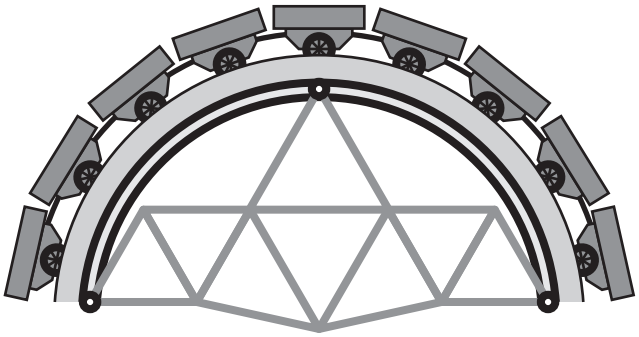

Figure Q11(*a*)

Part of the **symmetrical** pin-jointed support structure is loaded as shown in Figure Q11(*b*).

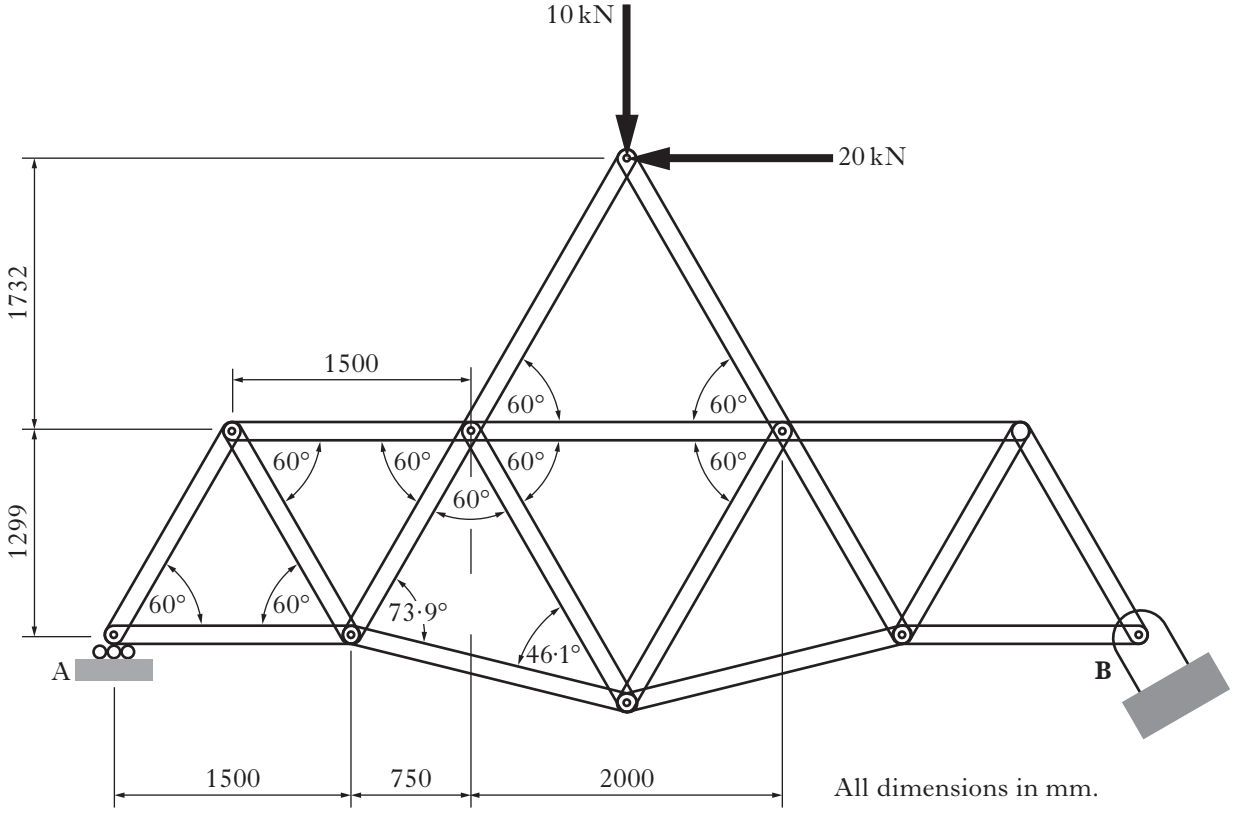

Figure Q11(*b*)

(*a*) Calculate the horizontal and vertical components of the reaction at **B**. **7**

11. continued

Figure Q11(*c*) shows a sectioned portion of the frame structure.

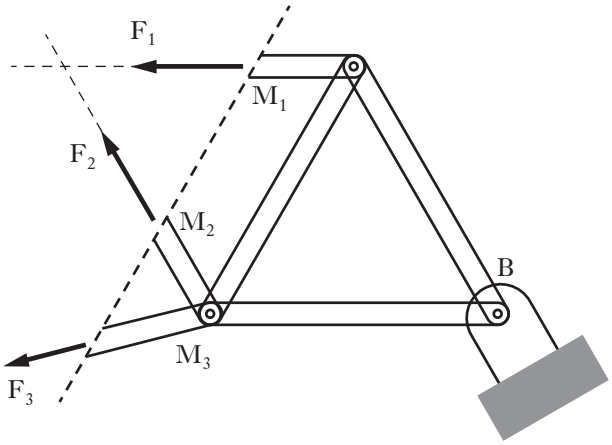

Figure Q11(*c*)

(*b*) Using the *method of sections*, determine the magnitude and nature of the forces acting in members M_1, M_2 and M_3. **17**

Loading on the structure is monitored by analogue strain gauges. The strain-gauge signals are processed by a 9-bit A–D converter (ADC), which has a reference voltage of **2·555 V** and uses a feedback resistor of 2 kΩ. The system operates on a 5 V supply.

(*c*) On **Worksheet Q11(c)**, complete the required ADC circuit. Show all working and component values. **8**

The number of cars on the roller coaster is counted by pulses sent to the circuit shown in Figure Q11(d) and on **Worksheet Q11(d)**.

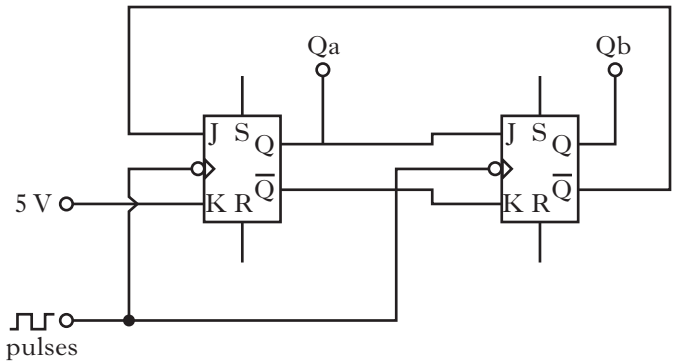

Figure Q11(*d*)

(*d*) On **Worksheet Q11(d)**, complete the timing diagram for outputs Q_a, $\overline{Q}_a$, Q_b, $\overline{Q}_b$. **8**

Note: The initial voltages of the outputs are shown in bold.

(40)

[Turn over

12. The tablet computer device shown in Figure Q12(*a*) has a camera application which detects if it is being held still before it will take an image in low light conditions. It also has an emergency feature which shuts down the hard drive if the device is dropped.

Figure Q12(*a*)

An accelerometer is used to confirm the steadiness of the device and its orientation.

The camera will only function when the accelerometer signal is within a specified range.

The relevant microcontroller Port B connections are shown in the table below.

Input	PORTB pins	Output
	7	Shutter
	6	Bleeper
	5	Hard-drive shutdown
Shutter button	1	
Accelerometer pulse	0	

The main program works as follows.

In a loop, the accelerometer pulse is checked every millisecond. If the pulse from the accelerometer is high, the variable PULSECOUNT is incremented.

After looping continuously for 25 ms, the value in PULSECOUNT is checked. If PULSECOUNT is within the range 10–13, the shutter output goes high for 80 ms. If PULSECOUNT is not within this range, the bleeper goes high for 150 ms, then low.

If the value in PULSECOUNT is greater than 23 this indicates that the device has been dropped and is in freefall. In this case the hard-drive shutdown signal goes high for 2 ms.

(*a*) Write, in assembler code, the program *main* to carry out the function described above. **21**

Note: The sub-procedure *pause* creates a delay of 1 ms multiplied by the value in the Working Register W before the procedure is called. The register files LOOPCOUNT and PULSECOUNT have been set up and TRISB has been initialised.

12. continued

The tablet chassis is made from an aluminium-alloy extrusion with a wall thickness of 2 mm. The shape and dimensions of the cross-section are shown in Figure Q12(*b*).

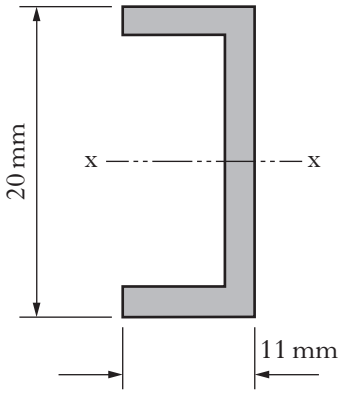

Figure Q12(*b*)

(*b*) Calculate the second moment of area of the section about x-x. **3**

A strength test was carried out on a length of the extrusion shown in Figure Q12(*c*) below.

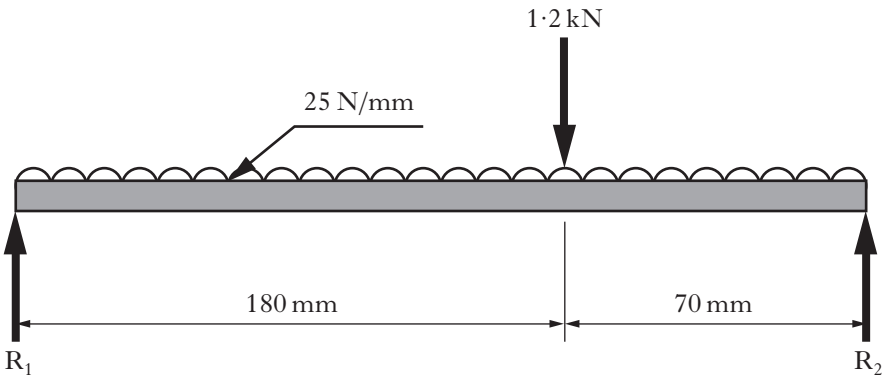

Figure Q12(*c*)

(*c*) Calculate the reaction at R_1. **2**

(*d*) On **Worksheet Q12** complete the shear-force diagram (showing significant values) and the bending-moment diagram (show all working and complete the table of values). **14**

(40)

[*END OF QUESTION PAPER*]

ACKNOWLEDGEMENTS

Question 11 – Arina P Habich/shutterstock.com
Question 12 – Igor Shikov/shutterstock.com

FOR OFFICIAL USE

X036/13/11

NATIONAL QUALIFICATIONS 2015

TUESDAY, 12 MAY
1.00 PM – 4.00 PM

TECHNOLOGICAL STUDIES

ADVANCED HIGHER

Worksheets for Questions 1, 2, 6, 9, 10, 11(c), 11(d) and 12
Information Sheet for Question 5

Fill in these boxes and read what is printed below.

Full name of centre

Town

Forename(s)

Surname

Date of birth
Day Month Year

Scottish candidate number

Number of seat

To be inserted inside the front cover of the candidate's answer booklet and returned with it.

WORKSHEET Q1

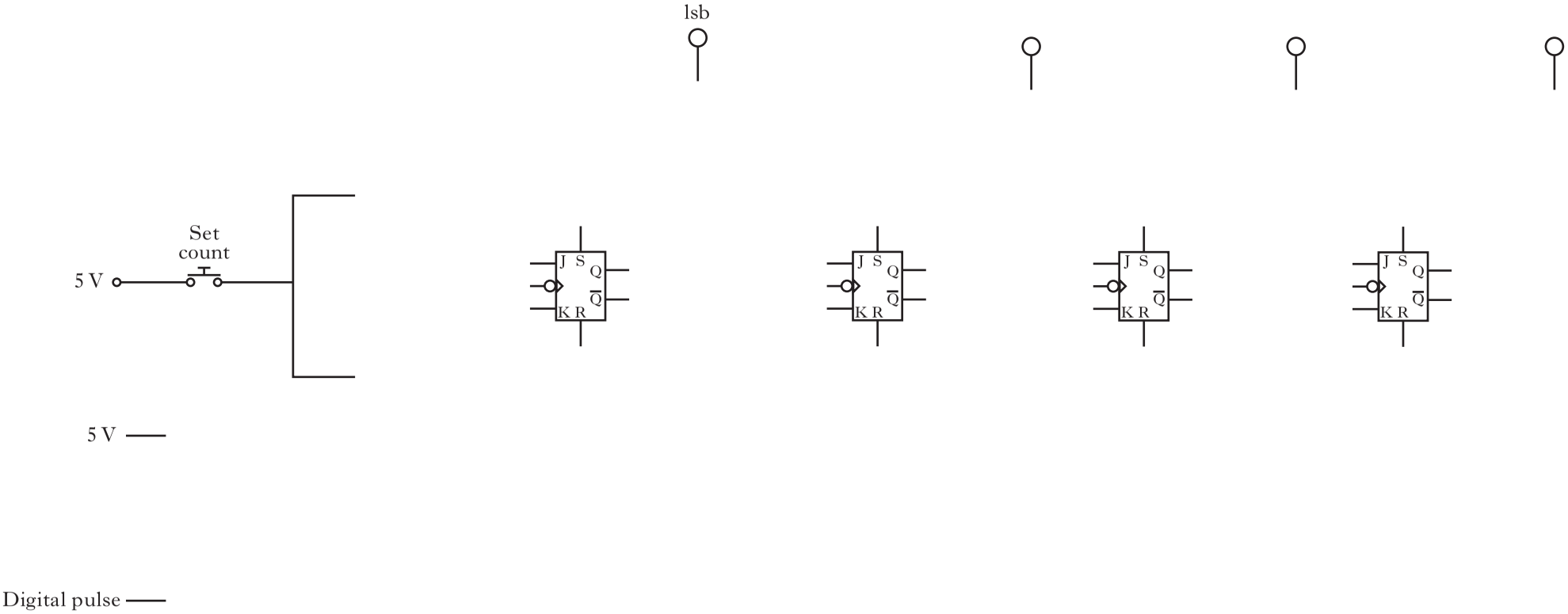

WORKSHEET Q2

(i)

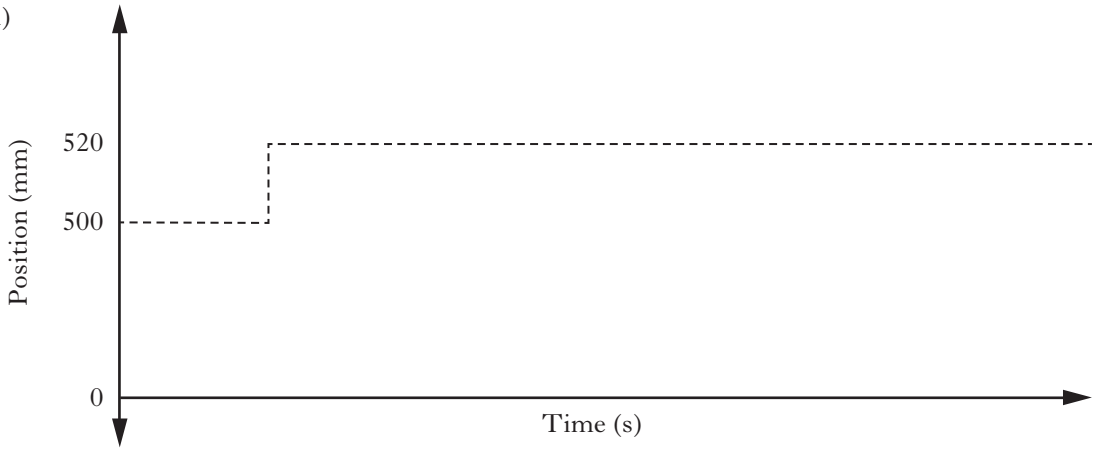

(ii)

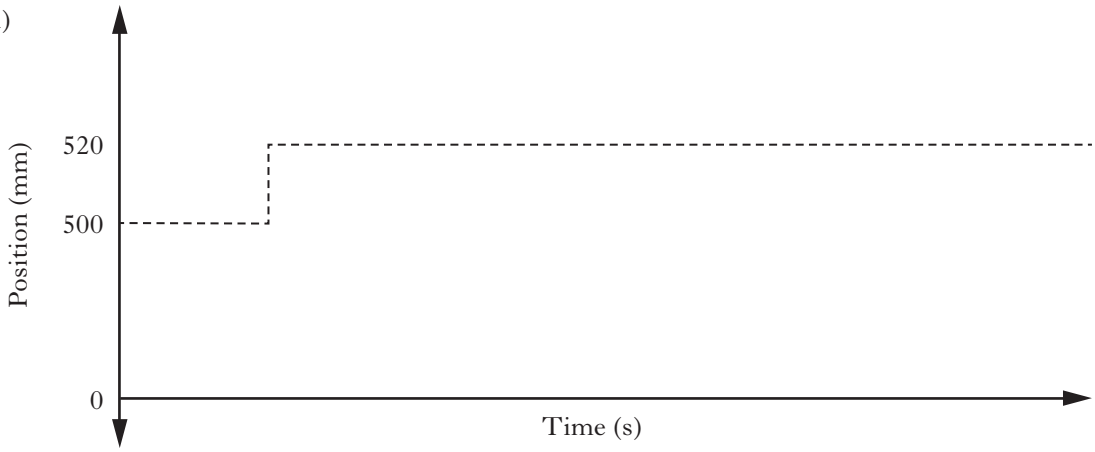

(iii)

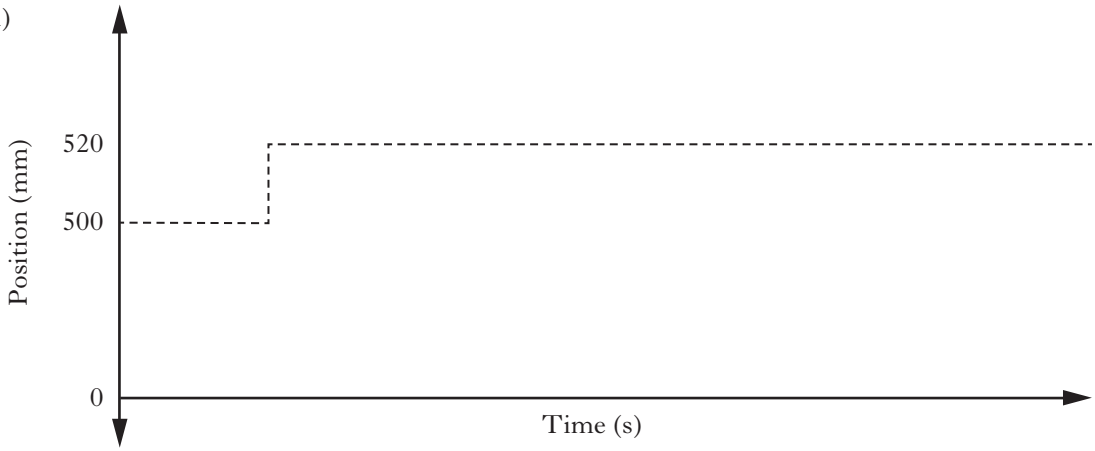

INFORMATION SHEET Q5

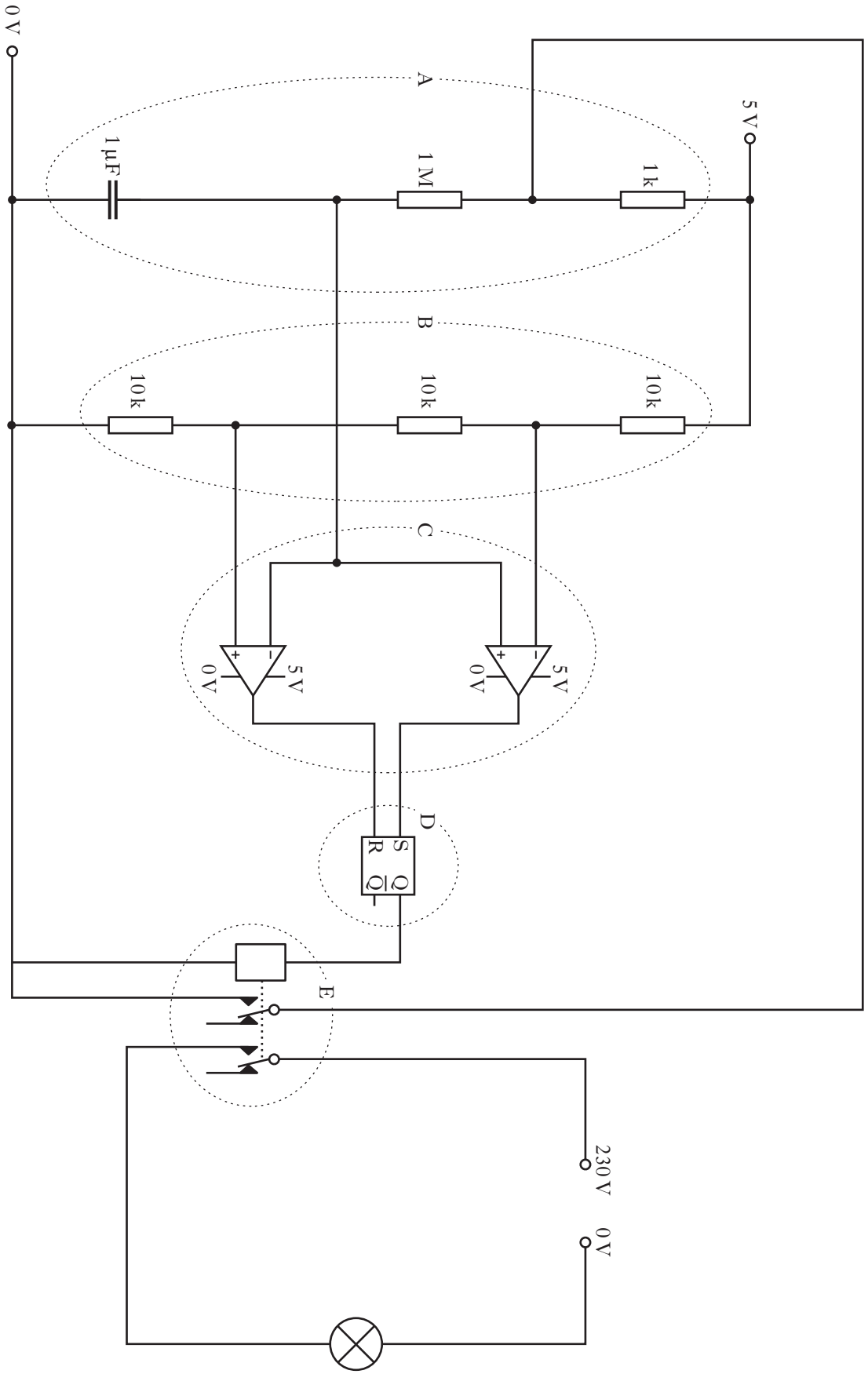

WORKSHEET Q6

```
brakeleft:  movwf   ERROR

            rlf     ERROR,F

            movfw   ERROR
            movwf   MARK
```

2 marks

```
            comf    MARK,W

            movwf   SPACE
```

2 marks

```
            bsf     PORTB,7
            movfw   MARK
            call    pause

            bcf     PORTB,7
            movfw   SPACE
            call    pause
```

2 marks

```
            return
```

```
brakeright: movwf   ERROR

            comf    ERROR,F

            incf    ERROR,F
```

2 marks

```
            rlf     ERROR,F

            movfw   ERROR
            movwf   MARK

            comf    MARK,W
            movwf   SPACE

            bsf     PORTB,6
            movfw   MARK
            call    pause
            bcf     PORTB,6
            movfw   SPACE
            call    pause
            return
```

WORKSHEET Q9

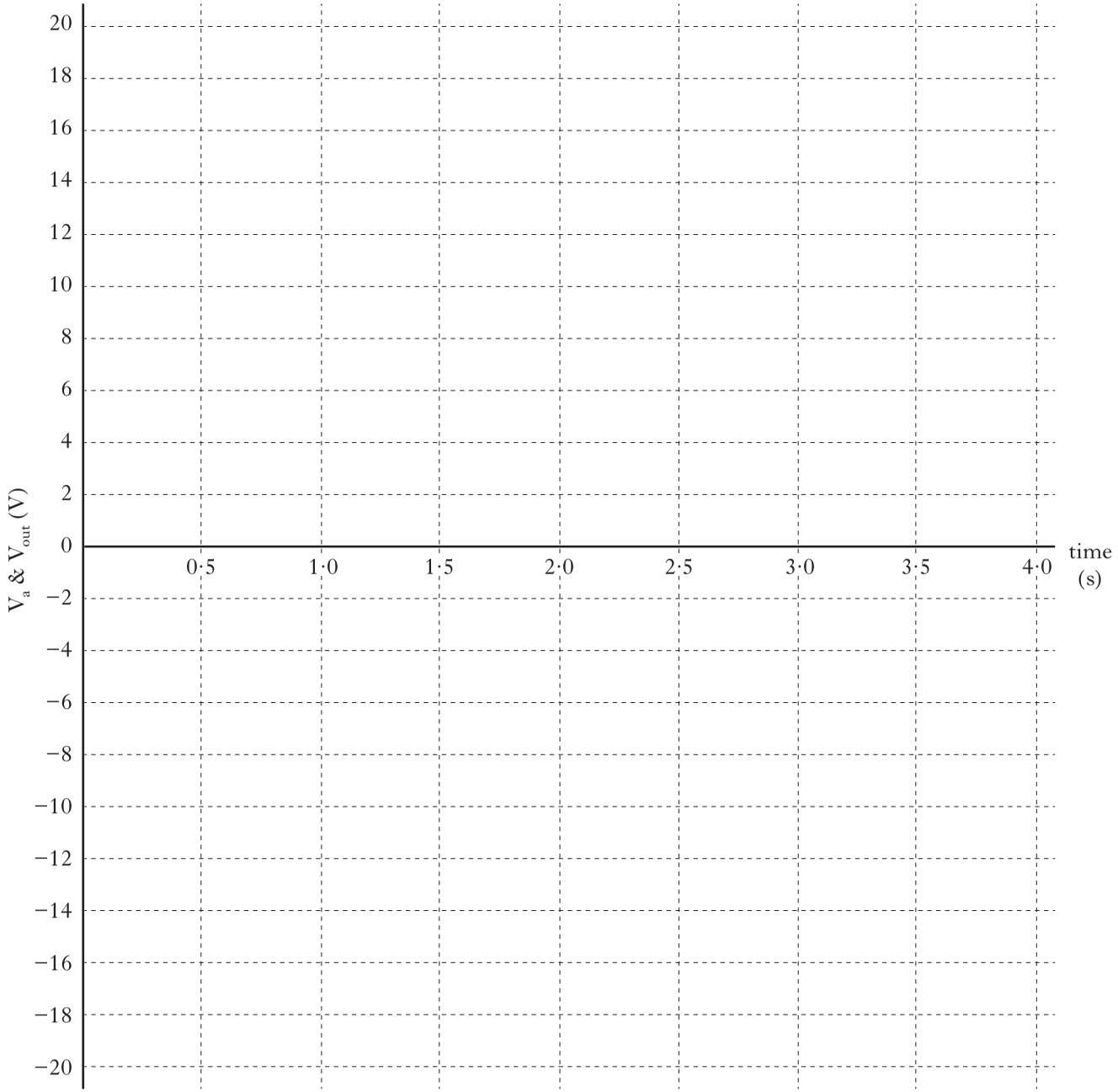

Time (s)	V_a (V)	V_{out} (V)
0·0	0	0
0·5		
1·0		
1·5		
2·0		
2·5		
3·0		
3·5		
4·0		

WORKSHEET Q10

WORKSHEET Q11(c)

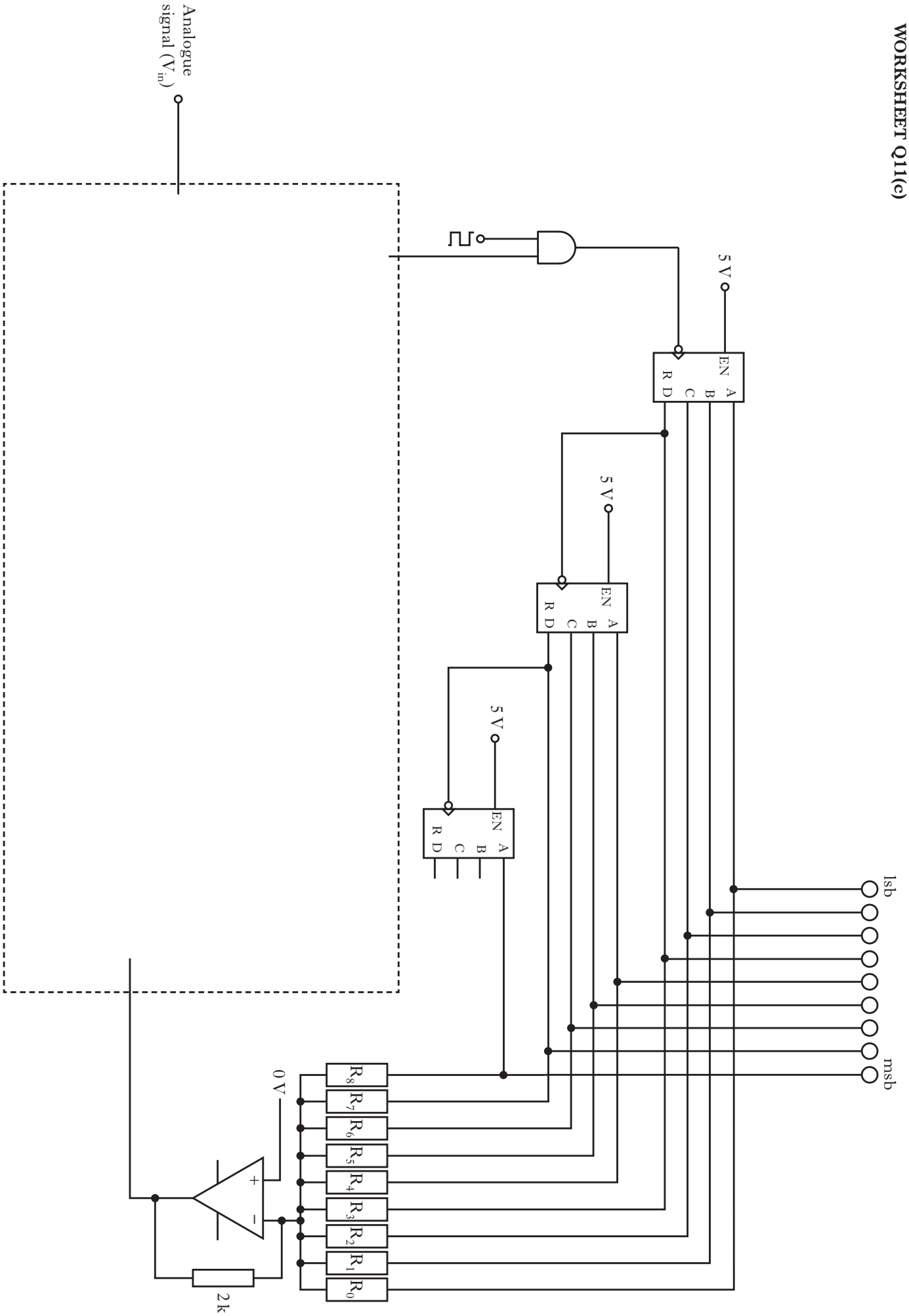

WORKSHEET Q11(d)

Division by odd numbers can be achieved by using JK bistables as shown below.

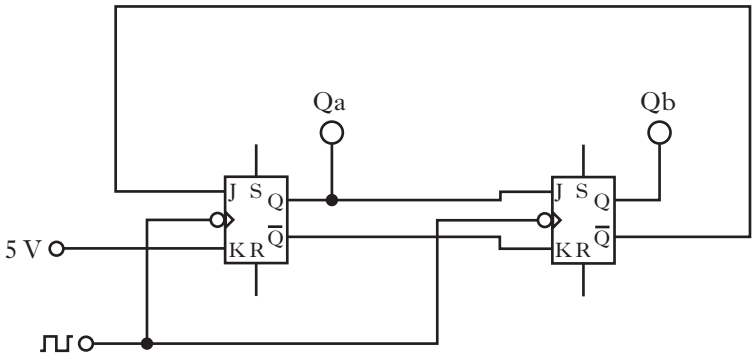

Clocked operations are as follows.

J=0 and K=0	Q stays the same on clocking
J=1 and K=0	Q=1 (Set) on clocking
J=0 and K=1	Q=0 (Reset) on clocking
J=1 and K=1	Q toggles to its opposite state on clocking

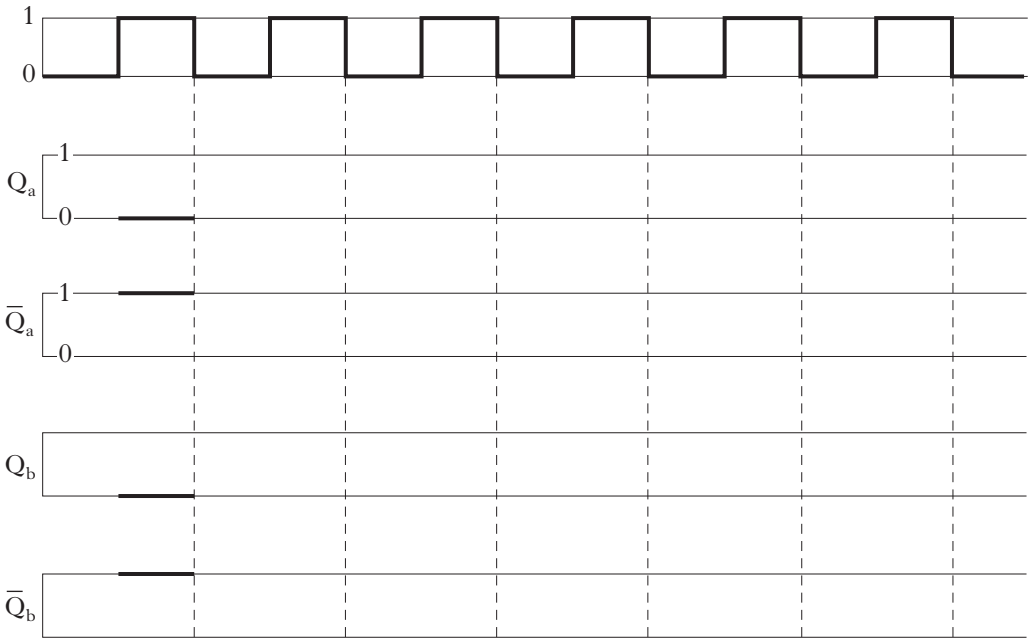

WORKSHEET Q12

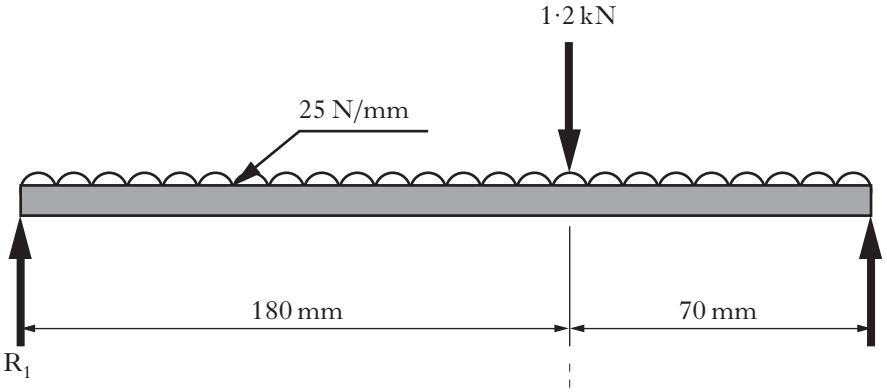

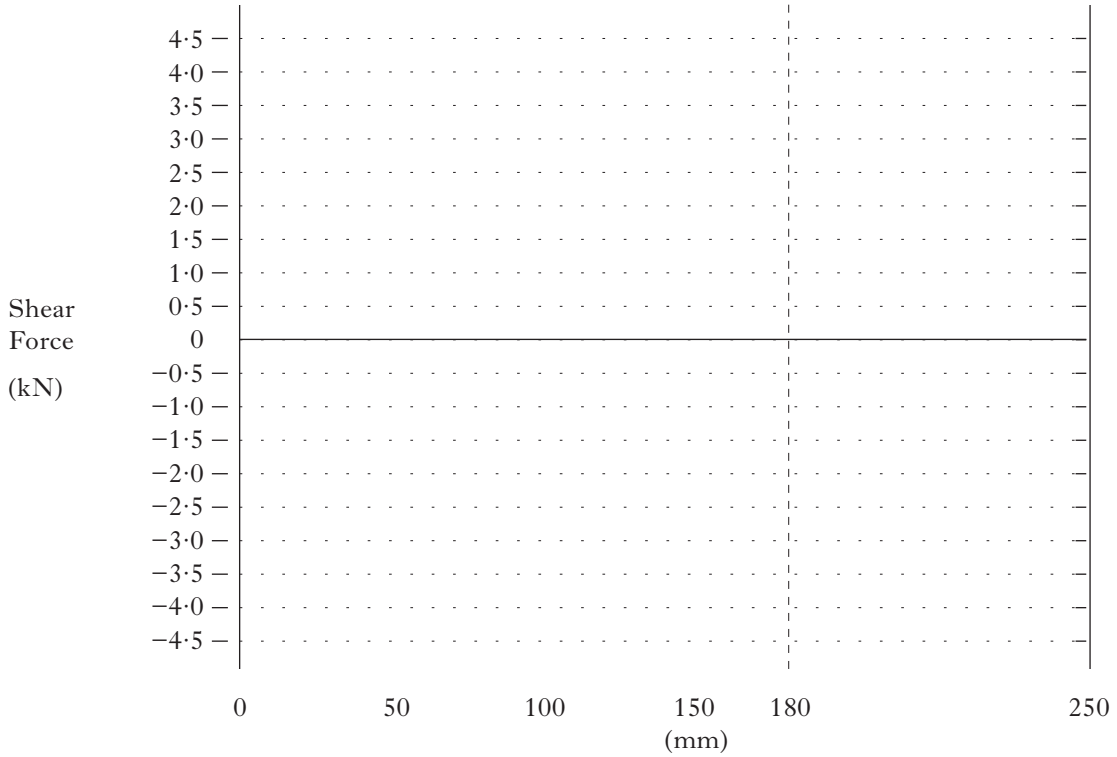

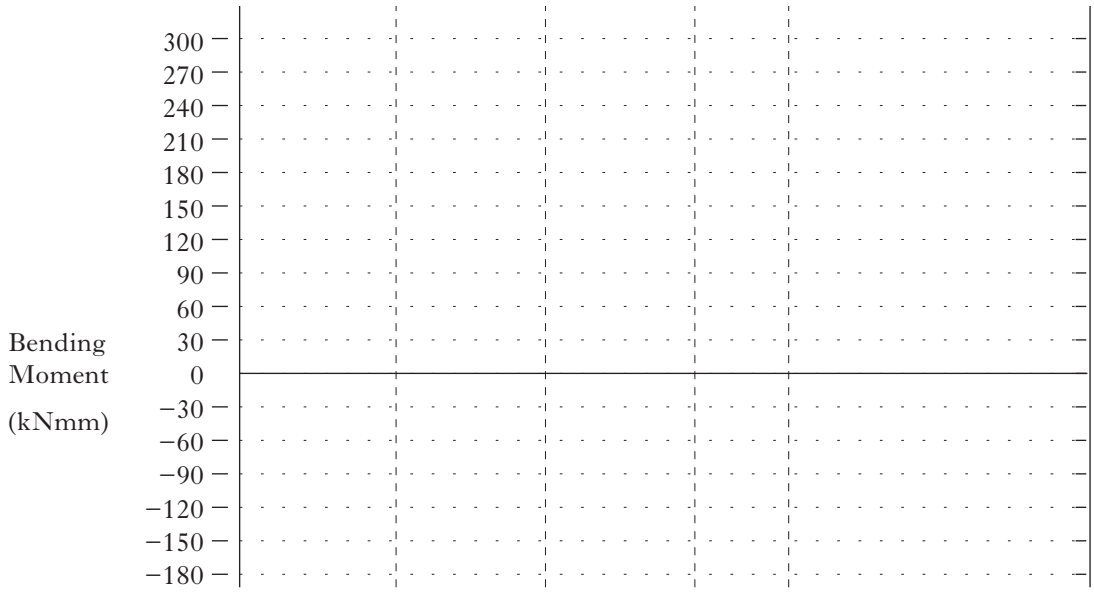

Distance from LHE (mm)	0	50	100	150	180	250
Bending Moment (kNmm)						

[*END OF WORKSHEETS*]

[BLANK PAGE]

DO NOT WRITE ON THIS PAGE

[BLANK PAGE]

DO NOT WRITE ON THIS PAGE