X036/12/01

NATIONAL QUALIFICATIONS 2015

TUESDAY 12 MAY
1.00 PM – 4.00 PM

TECHNOLOGICAL STUDIES
HIGHER

200 marks are allocated to this paper.

Answer **all** questions in Section A (120 marks).

Answer **two** questions from Section B (40 marks each).

Where appropriate, you may use sketches to illustrate your answer.

Reference should be made to the Higher Data Booklet (2008 edition) which is provided.

PB

Marks

SECTION A

Attempt all the questions in this Section. (Total 120 marks)

1. The tumble dryer shown in Figure Q1 vents warm air back into the house through a filter, and collects moisture from the clothes in a water tank. An air flow sensor detects when the filter needs to be cleaned.

Figure Q1

A logic system controls a warning buzzer. If the water tank is full (W=1) or the air flow is too low (A=0) when the start button is pressed (S=1), then the buzzer sounds (B=1).

(*a*) Draw a truth table for the output, B, in terms of the inputs S, W and A. **3**

(*b*) Write a Boolean expression for B in terms of S, W and A. **4**

(*c*) Draw a logic diagram for the control system, constructed from AND, OR and NOT gates. **3**

(*d*) Draw a logic diagram for the control system, using only NAND gates.

Simplify where appropriate. **4**

(14)

Marks

2. Two cables are used to lift the bridge section shown in Figure Q2(*a*).

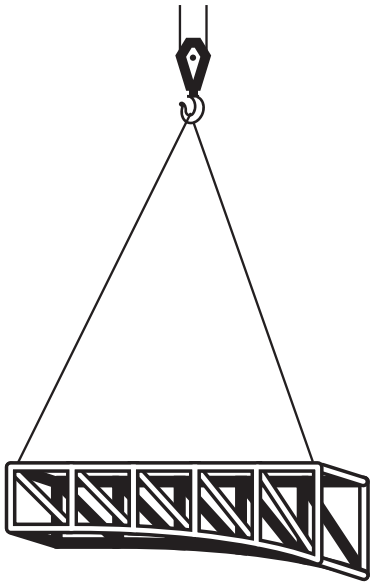

Figure Q2(*a*)

The bridge section can be considered to be a beam in **static equilibrium** when supported by the cables, and can be represented by the free-body diagram shown in Figure Q2(*b*).

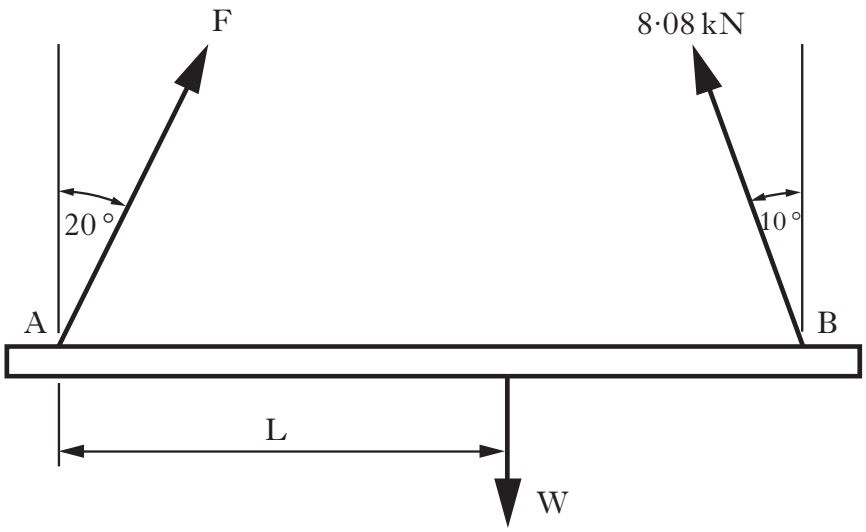

Figure Q2(*b*)

(*a*) Calculate the force, F, in the cable acting at A, by resolving horizontally. **3**

(*b*) Calculate the weight, W, of the bridge section. **3**

The length of the bridge section between points A and B is 5 m.

(*c*) Calculate the distance, L, by taking moments. **5**

(11)

Marks

3. A 3-D printer extrudes a thin filament of hot plastic, in order to build up three-dimensional solid objects similar to the component shown in Figure Q3. The extruder is driven by a stepper motor.

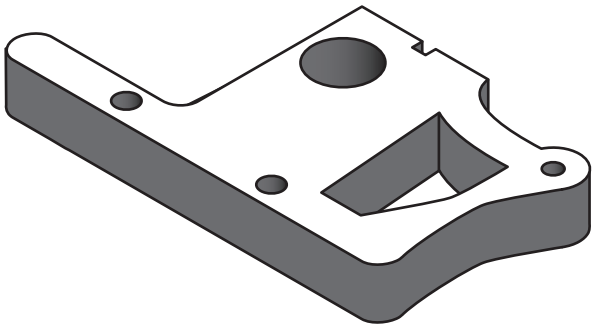

Figure Q3

The 1·8° stepper motor is controlled by pins 7, 6, 5 and 4 of a microcontroller. The sub-procedure *extruderspeed* shown below rotates the stepper motor clockwise.

```
extruderspeed:    for b0 = 1 to b2
                      let pins = %10100000
                      pause b8
                      let pins =%10010000
                      pause b8
                      let pins = %01010000
                      pause b8
                      let pins = %01100000
                      pause b8
                  next b0
                  return
```

The stepper motor is to rotate through 1·3 revolutions at a speed of 6 r/min.

(*a*) Calculate the required values for b2 and b8, showing all working. **9**

After extruding plastic, the motor reverses a half revolution in 1·4 seconds to clear excess plastic from the extruder.

(*b*) In PBASIC, write the sub-procedure *extrudrev* that will rotate the stepper motor **anticlockwise**. **7**

(16)

4. A diesel-powered electricity generator is shown in Figure Q4(*a*). The generator must maintain a preset speed despite any changes in the electrical load.

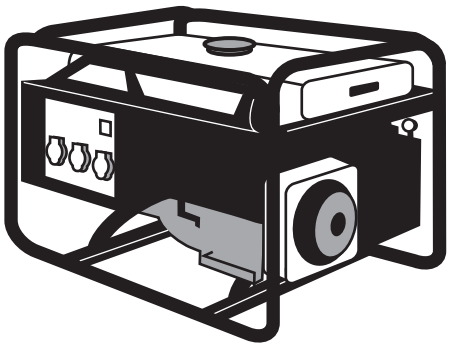

Figure Q4(*a*)

The actual speed of the generator is monitored by a tachogenerator. If the speed varies from the set value, it is adjusted by an on-board fuel regulator.

(*a*) State the full name of the type of control used. **2**

(*b*) Draw a control diagram for the speed-control system. **6**

The electronic circuit used to control the fuel regulator is shown in Figure Q4(*b*).

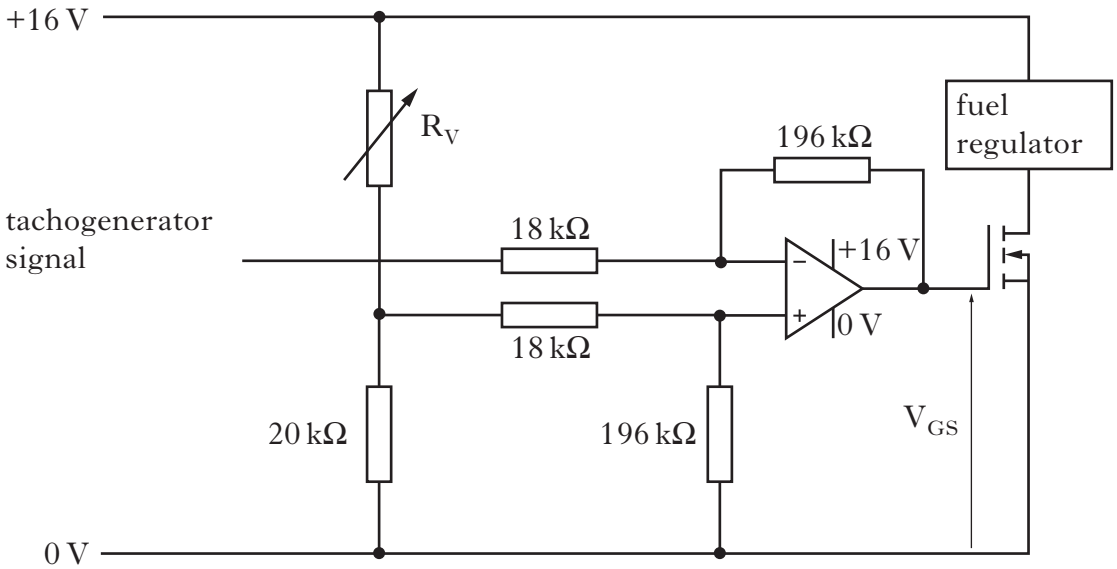

Figure Q4(*b*)

When the generator is calibrated at the factory, V_{GS} is to be 2·8 V when the tachogenerator signal is 6·8 V.

(*c*) Calculate the value to which resistor R_V should be set, to calibrate the generator. **7**

(15)

Marks

5. A load-extension graph for a standard test specimen is shown in Figure Q5.

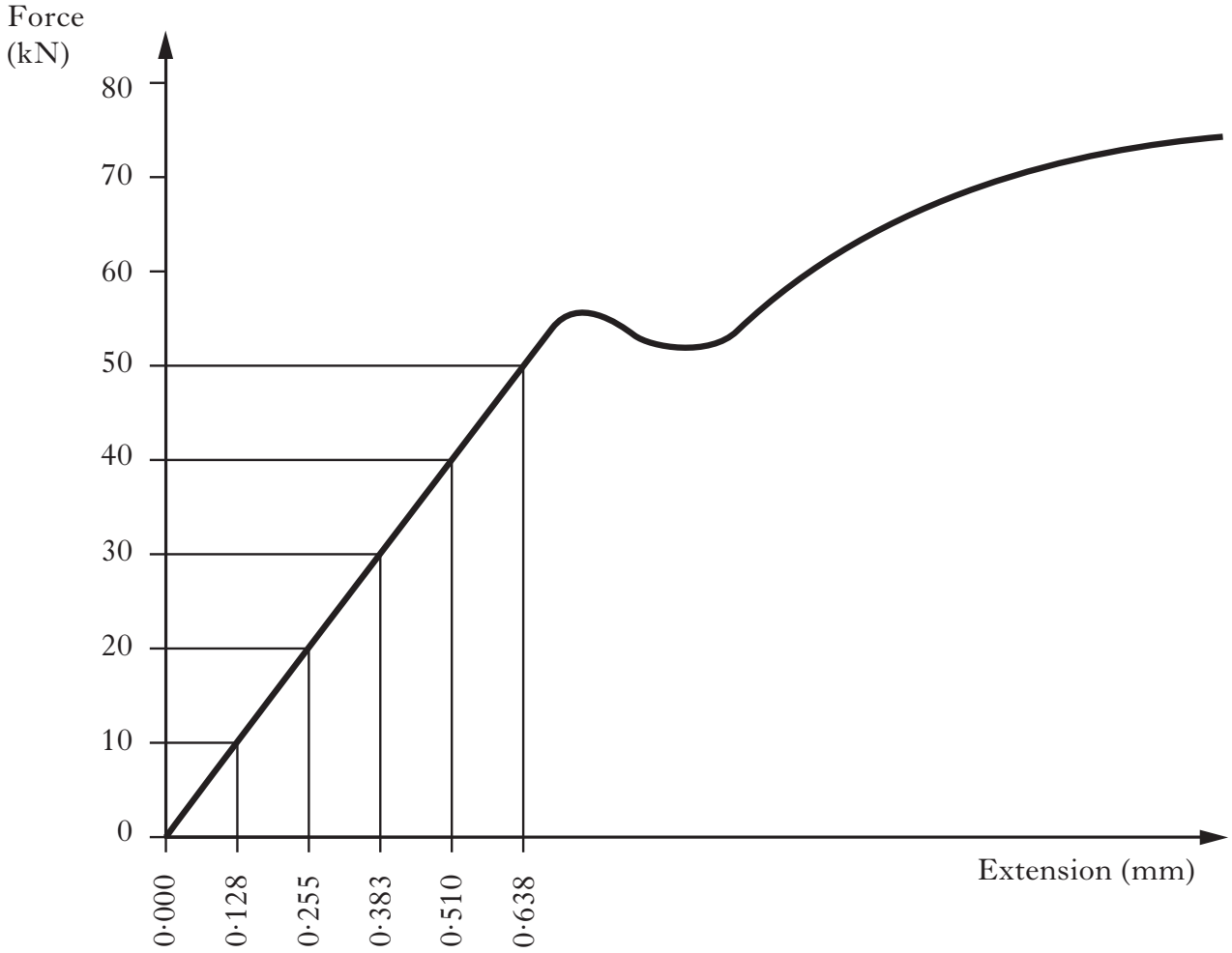

Figure Q5

The test specimen was initially 100 mm long and had a cross-sectional area of 40 mm^2.

(*a*) Calculate Young's Modulus for the test specimen. **6**

(*b*) State the name of the material. **1**

A solid round bar made from this material is to be used to carry a tensile load of 6 kN. A Factor of Safety of 8 is to be applied.

(*c*) Calculate the minimum required diameter of the bar. **7**

(14)

Marks

6. A microcontroller controls a motor via the transistor driver shown in Figure Q6.

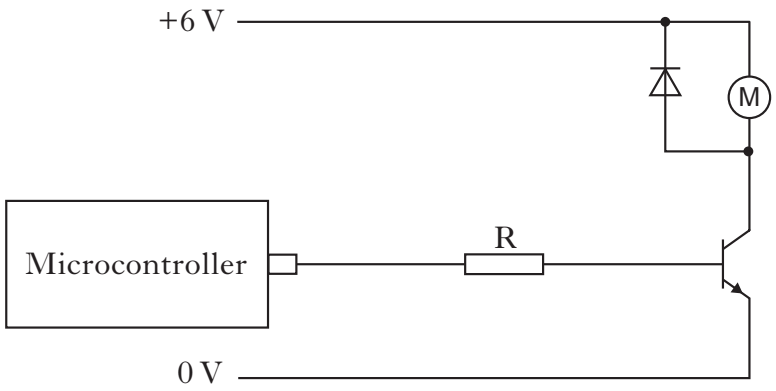

Figure Q6

(*a*) Describe the purpose of the diode in Figure Q6. **2**

When the signal from the microcontroller is high, the voltage at the output pin is 5·8 V and the base current to the transistor is 4·4 mA.

(*b*) Calculate the value of resistor R. **3**

The motor is rated at 6 V, 20 W.

(*c*) Calculate the minimum required current gain of the transistor. **4**

The single transistor shown in Figure Q6 is replaced by a Darlington Pair.

(*d*) Draw a circuit diagram showing this new arrangement. **3**

The Darlington Pair has a gain of 1020 when fully saturated.

(*e*) Calculate the maximum value of resistor R in the new circuit. **5**

There would be several advantages in replacing the Darlington Pair by a MOSFET transistor.

(*f*) State **two** advantages of MOSFET transistors compared with bipolar transistors. **2**

(19)

[Turn over

7. A microcontroller controls the temperature of heated hand-grips on a motorcycle. The desired temperature is set by the potentiometer shown in Figure Q7(*a*).

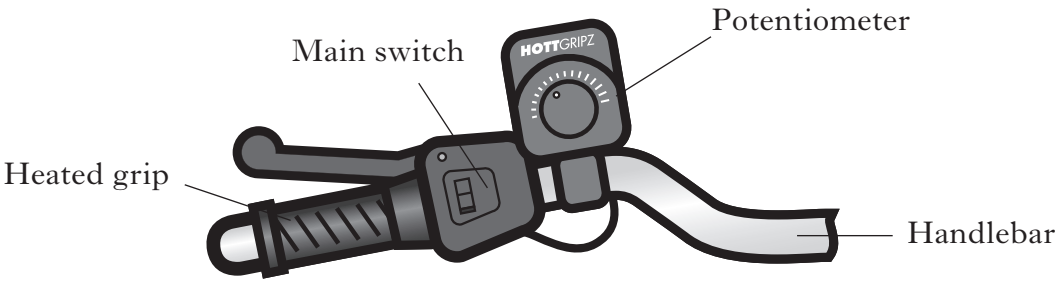

Figure Q7(*a*)

The flowchart for the program to control the heated grips is shown in Figure Q7(*b*).

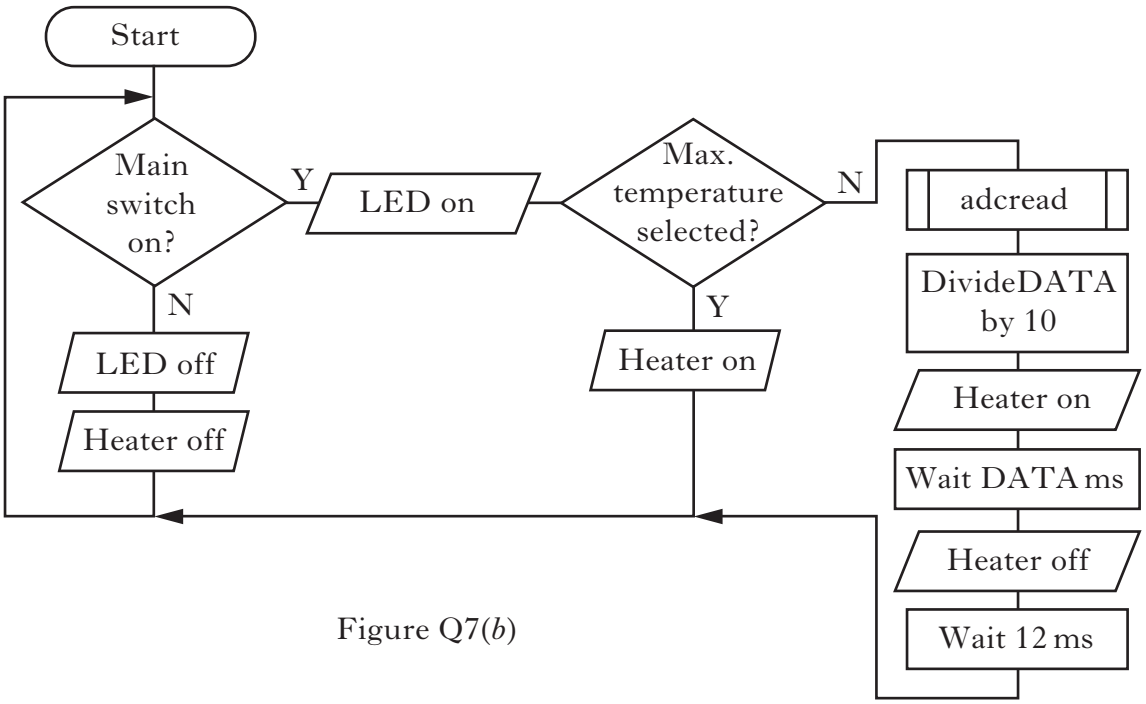

Figure Q7(*b*)

Microcontroller connections are:
Pin 0: Main switch (1=ON); Pin 1: Max. temperature (1=selected);
Pin 4: LED; Pin 5: heater.

A prewritten sub-procedure *adcread* records the potentiometer value and stores it in the variable DATA. **The microcontroller has been initialised**.

(*a*) Write, in PBASIC, the program for the flowchart shown in Figure Q7(*b*). **15**

(*b*) State the name of the method used to control the temperature of the heated grips. **1**

(16)

Marks

8. A vending machine provides tea or coffee, with milk (white) or without milk, and with or without sugar.

The circuit shown in Figure Q8 identifies the hot-drink selection, and sends a signal, V_{out} , to a microcontroller in order to produce the requested drink.

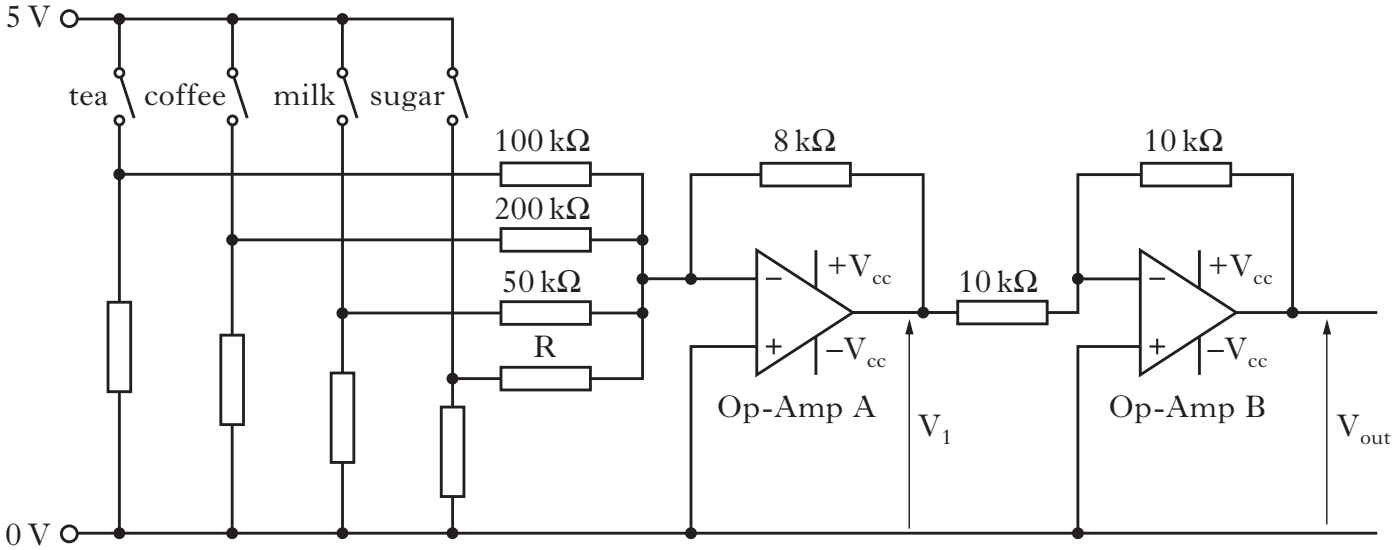

Figure Q8

(*a*) State the names of the configurations of op-amp A and of op-amp B. **2**

(*b*) Calculate the value of V_{out} when **white tea without sugar** is selected. **4**

When **white coffee with sugar** is selected, $V_{out} = 3{\cdot}6$ V.

(*c*) Calculate the required value of resistor R. **4**

(*d*) (i) State the hot-drink combination that produces the maximum voltage input to op-amp A. **1**

(ii) Calculate the minimum required voltage supply (V_{cc}) to op-amp A. **4**

(15)

[*END OF SECTION A*]

[Turn over

SECTION B

Attempt any TWO questions in this Section.

Each question is worth 40 marks.

9. A central-heating system is required to circulate water which is at a higher temperature on colder days than it is on warmer days.

The circuit shown in Figure Q9(*a*) controls the temperature of the water in the central-heating system.

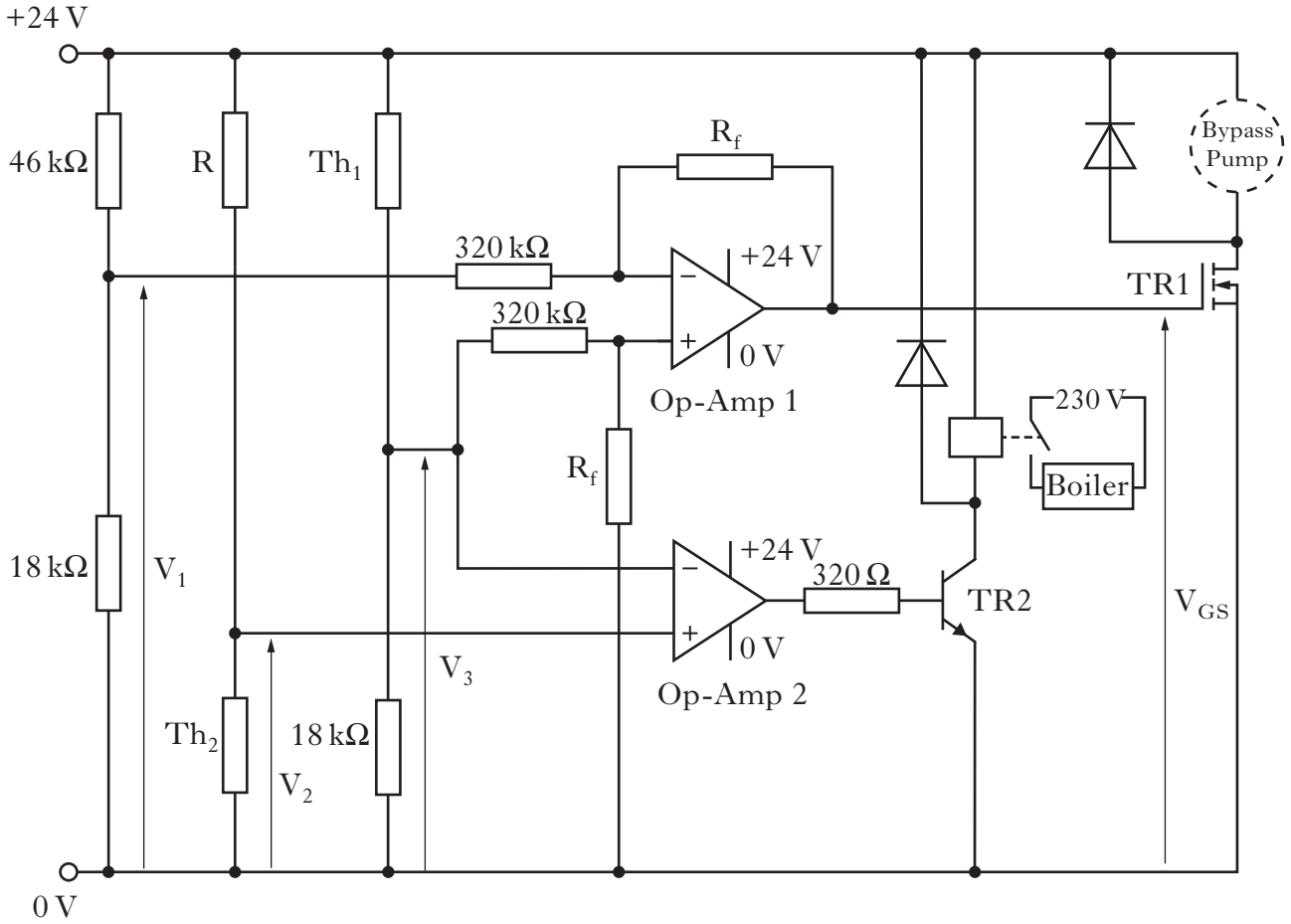

Figure Q9(*a*)

Marks

Th_1 measures the temperature of the water in the heating system and Th_2 measures the air temperature outside the building. Both thermistors are Type 6.

(*a*) Describe how the circuit shown in Figure Q9(*a*) controls the boiler as the outside temperature decreases. **4**

(*b*) Calculate a suitable value for resistor R to switch off the boiler if the water temperature exceeds 45 °C when the outside temperature is at least 16 °C. **4**

9. (continued)

When the boiler switches off the water temperature may be above a pre-set safety value. The bypass pump is then required to circulate the water until it cools below this value.

(*c*) Describe in detail how the control system operates to circulate the water until it cools. **5**

Transistor 1 (TR1) is fully switched on when V_{GS} = 2·3 V. The bypass pump should switch on when the resistance of Th_1 is 30 kΩ.

(*d*) Calculate a suitable value for R_f. **9**

The boiler is attached to the wall using the bracket arrangement shown in Figure Q9(*b*).

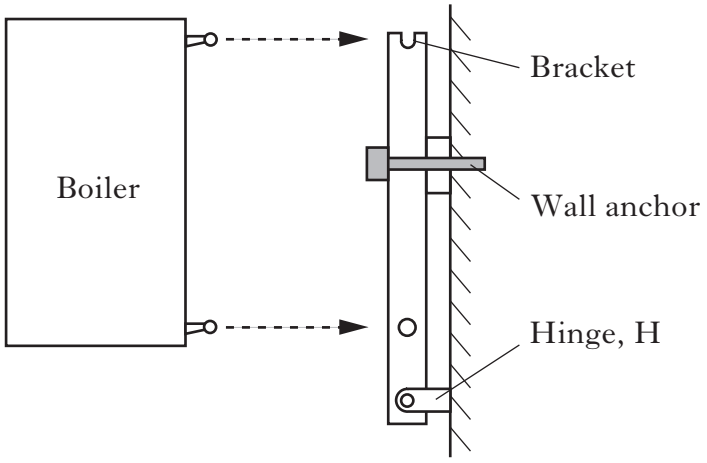

Figure Q9(*b*)

Figure Q9(*c*) shows the forces acting on the bracket. For clarity, the bracket has been rotated to the horizontal.

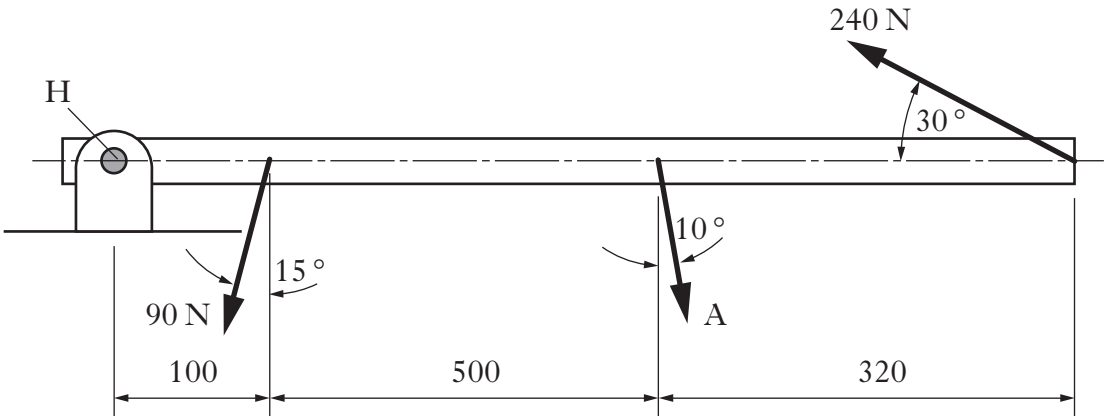

Figure Q9(*c*)

(*e*) Calculate the force, A, exerted by the wall anchor. **7**

(*f*) Calculate the **magnitude** and **direction** of the reaction force at the hinge, H. **11**

(40)

Marks

10. Figure Q10(*a*) shows a gantry which supports the overhead "start" lights at a motor racing circuit.

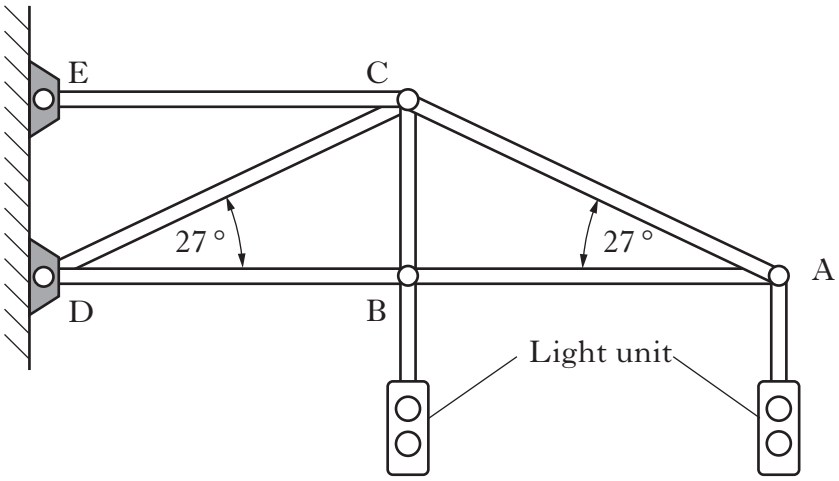

Figure Q10(*a*)

Each light unit weighs 1·18 kN.

(*a*) Calculate the **magnitude** and **nature** of the forces in members AC, AB, CB, CD and CE. **17**

Due to safety concerns, the strain in member CE and the wind speed are measured and monitored by a microprocessor-based data logger. The strain in member CE is measured by strain gauges and the wind speed is measured by a device connected to a tachogenerator.

(*b*) Draw a block diagram showing the main sub-systems of the data-logging system. **6**

As the wind speed varies, the strain in member CE changes, and so the sample rate at which the strain is logged is altered, depending on the wind speed. As the wind speed increases more frequent strain readings are taken.

A sub-procedure *samplerate* takes **one** reading of the wind-speed value and then **ten** strain readings. *Samplerate* uses a prewritten sub-procedure *windspeed* which records a wind-speed value and stores it in a variable called DATA. A second prewritten sub-procedure called *readstrain* reads one value of strain and stores it for further processing in the main program.

10. (continued)

The time delay between strain readings depends on the wind-speed value stored in DATA. The required time-delay value is stored in the variable b3, according to the conditions shown below.

If the wind-speed value is <70, then b3=600.
If the wind-speed value is >=70 and <120, then b3=300.
If the wind-speed value is >=120, then b3=60.

(*c*) Draw a flowchart to represent the sub-procedure *samplerate*. **11**

Figure Q10(*b*) shows the relationship between the output voltage of the tachogenerator and the wind speed.

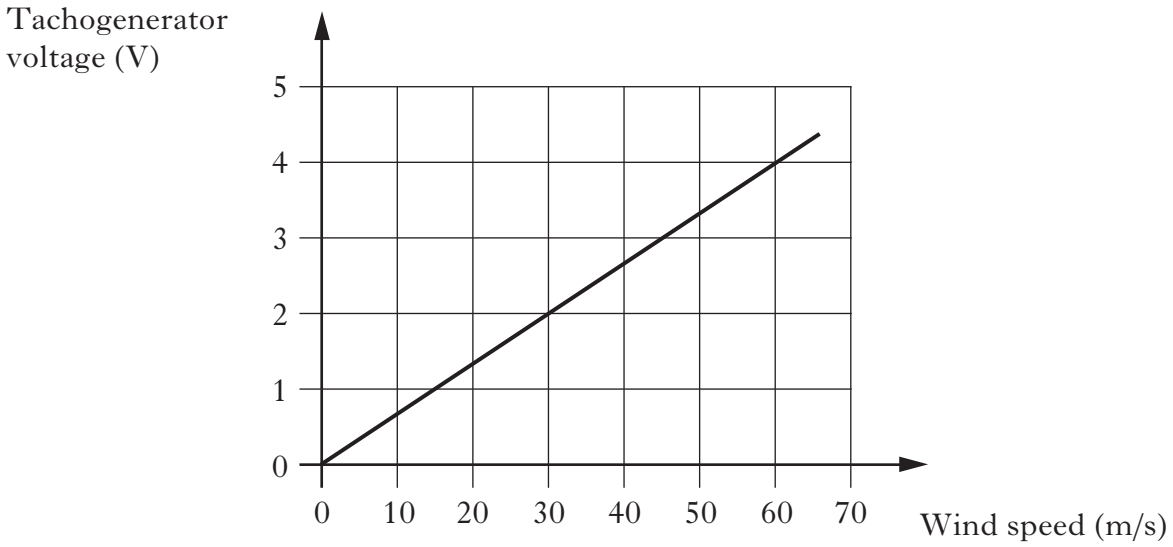

Figure Q10(*b*)

When the wind speed is 30 m/s, the value stored in DATA is 186. The 8-bit ADC, (analogue to digital converter), uses a reference voltage of 5 V.

(*d*) Draw an appropriate signal-conditioning system for the strain-gauge signal, based on a **single** op-amp. Show all calculations and resistor values. **6**

(40)

[Turn over

11. The radio-controlled racing car shown in Figure Q11(*a*) has a "trim" switch, which enables the steering to be adjusted to the straight-ahead position, and any misalignment corrected. The "trim" switch can be set to "left" or "right".

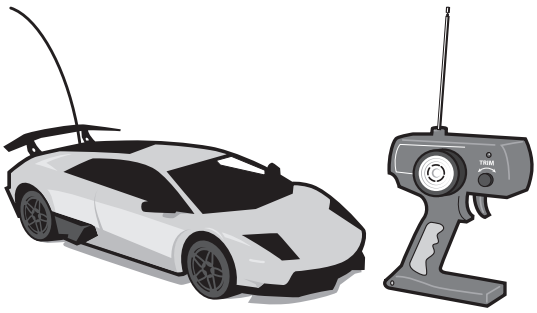

Figure Q11(*a*)

The sub-procedure *steer* is represented by the flowchart shown in Figure Q11(*b*). This allows a user to correct any error in the steering angle by operating the "trim" switch. The "trim" switch changes the value in the variable TRIM. The prewritten sub-procedure *adcread* reads an actual value from the steering-wheel potentiometer and stores it in the variable DATA. The required variation from the straight-ahead position is calculated and stored in the variable RESULT. The value in RESULT modifies the value in DATA to give the corrected steering value. The prewritten sub-procedure *steerangle* then uses the new value held in DATA to steer the car.

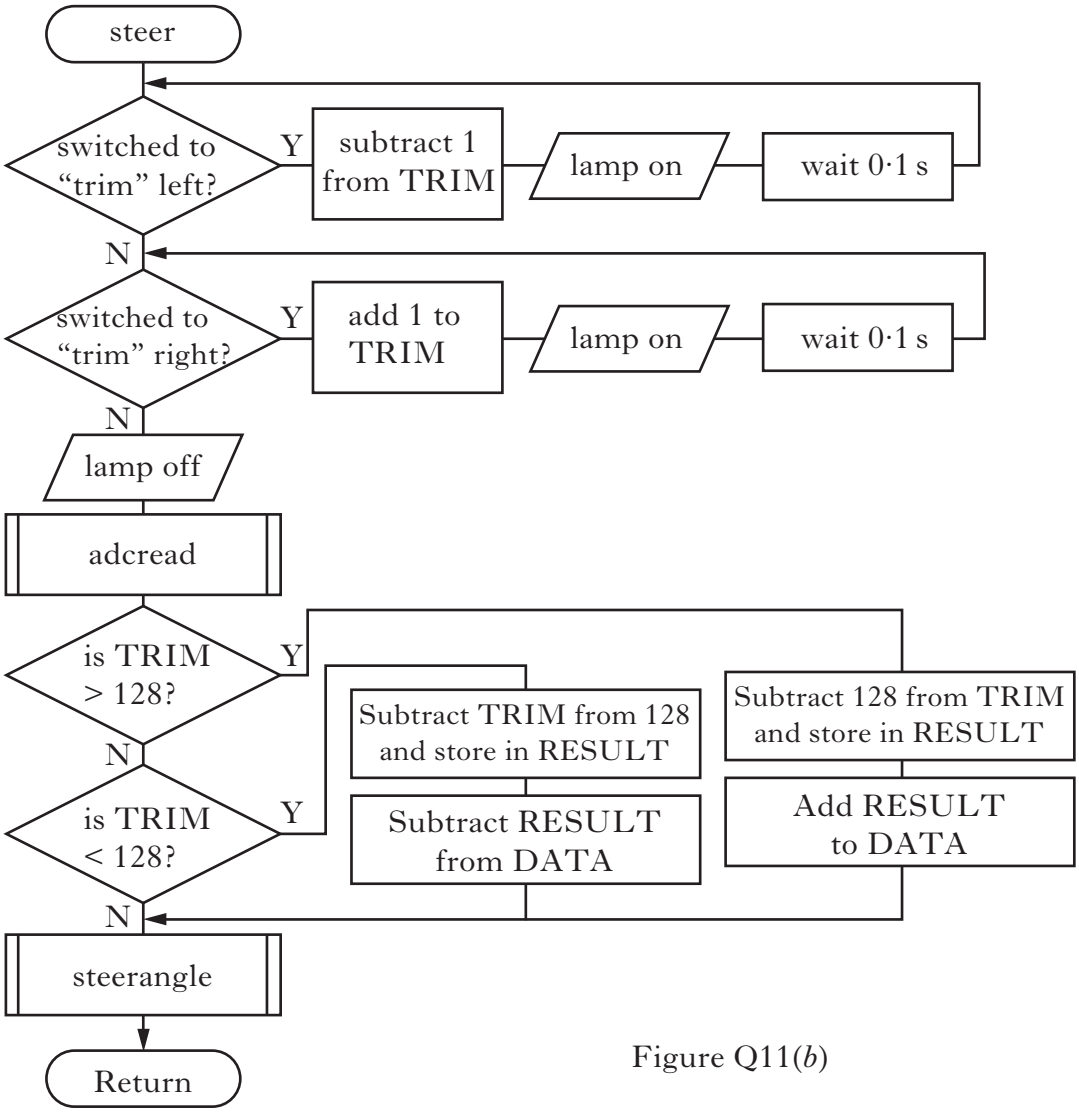

Figure Q11(*b*)

Note: Trim "left" switch is connected to Pin 1 and Trim "right" to Pin 2 Trim switch selected gives logic 1. The lamp is connected to Pin 7.

11. (continued)

(*a*) Write, in PBASIC, the sub-procedure *steer*. **22**

The racing car uses an on-board microcontroller to control the speed of the drive motor by pulse-width modulation (PWM).

Figure Q11(*c*) shows a control system for the drive motor. When Pin 4 is high, the drive motor has +6V across it, which moves the car forward. The car reverses when Pin 4 and Pin 5 are high, and the drive motor has –6 V across it.

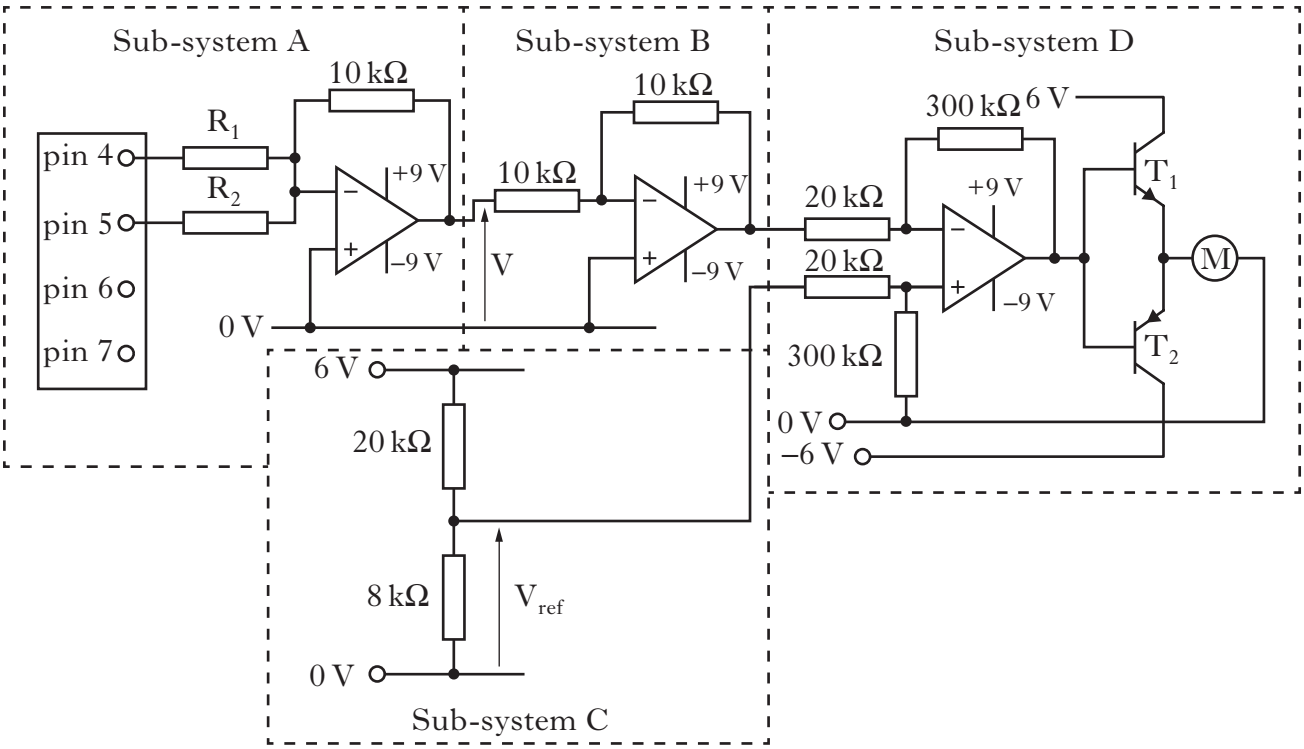

Figure Q11(*c*)

When high, the voltage at the microcontroller output pin is 6·8 V.

(*b*) Describe in detail how the circuit shown in Figure Q11(*c*) controls the motion of the car. Refer to sub-systems A to D. **6**

(*c*) Calculate V_{ref} in sub-system C. **2**

The drive motor operates at full voltage when the output from the op-amp in sub-system D is +6·7 V or –6·7 V.

(*d*) (i) Calculate the required value for resistor R_1. **5**

(ii) Calculate the required value for resistor R_2. **5**

(40)

[*END OF QUESTION PAPER*]

ACKNOWLEDGEMENT

Question 1 – Image of Bosch tumble dryer is reproduced by kind permission of BSH Home Appliances Limited.