National 5
coursework
assessment task

Qualifications Scotland
Teisteanasan Alba

National 5 Graphic Communication Assignment Assessment Task

Valid for session 2025-26 only.

This assessment is given to centres in strictest confidence. You must keep it in a secure place until it is used.

This edition: January 2026 (version 1.0)

© Qualifications Scotland 2026

Contents

Introduction 1

Instructions for teachers and lecturers 2

Instructions for candidates 5

Introduction

This document contains instructions for teachers and lecturers and instructions for candidates for the National 5 Graphic Communication assignment.

This assignment has 40 marks out of a total of 120 marks available for the course assessment.

This is one of two course assessment components. The other component is a question paper.

Instructions for teachers and lecturers

You must conduct the assignment under a high degree of supervision and control. This means:

- candidates must be within your direct sight
- candidates must not interact with each other
- candidates must not have access to email, the internet and mobile phones
- candidates must complete their work independently — no group work is permitted
- classroom display materials that might provide assistance must be removed or covered
- with no interruption for learning and teaching
- in a classroom environment

Time

Candidates have 8 hours to complete the assignment, starting at an appropriate point in the course after all content has been delivered. Once candidates begin, they must continue in each subsequent class period until the permitted time allocation has been used up.

You have a responsibility to manage candidates' work, distributing it at the beginning and collecting it at the end of each session, and storing it securely in-between. This activity does not count towards the total time permitted for candidates to complete the assignment.

Resources

This is a closed-book assessment. Candidates must not have access to learning and teaching materials, the internet, notes, exemplar materials, resources on classroom walls or anything similar.

There may be instances where restriction of internet and/or network use is prohibited (for example, if you have a local authority-managed network with specific limitations or CAD software that is web-based). However, it remains your professional responsibility to make every effort to meet the assessment conditions.

Each assessment task includes instructions and details of any equipment or materials required. Candidates can also use normal classroom equipment, software and hardware (such as CAD and DTP software, and PCs to run the software) to complete the tasks.

Candidates can use a pre-made or existing A3 CAD template. No templates should be provided for any other part of the assessment. Candidates must independently follow the instructions given in the tasks to produce their evidence.

Reasonable assistance

Candidates must progress through each stage of the assignment without your intervention or guidance, having acquired the skills earlier in the course.

Once candidates complete the assignment, you must not return it to them for further work. You must not provide feedback to candidates or offer an opinion on the perceived quality or completeness of the assignment response at any stage.

You can provide reasonable assistance to support candidates with the following aspects of their assignment:

- ♦ printing, collating, stapling and labelling their evidence to ensure it is in the format specified by Qualifications Scotland
- ♦ ensuring candidates have all the materials and equipment required to complete the assignment
- ♦ understanding the information outlined in these instructions

Evidence

All candidate evidence (whether created manually or electronically) must be submitted to Qualifications Scotland in paper-based format.

Each task details what evidence is required and how many pages are expected. This is a guide to ensure that candidates do not produce too much work or spend too long on a single task. Single-sided A3 pages are preferred and are typically the most suitable for the tasks; however, it is acceptable to submit A4 pages if an A3 printer is not available.

Each piece of work must be labelled with the task number, for example, task 1a, and the back of each page must be clearly labelled with candidate details.

Alteration or adaptation

You must not alter, adapt or modify the assignment in any way. This includes moving the content of the assignment into a different format or workbook. All candidates must undertake the assignment exactly as it is provided.

Volume

Candidates should present their work on a maximum of eight single-sided A3 pages.

This figure is given to indicate the volume of evidence required; however, no penalty is applied where candidates exceed this. Full details of evidence requirements are contained within each assessment task.

Specific instructions for teachers and lecturers

You must follow these specific instructions. You must ensure that candidates are aware of the assessment conditions and know what they should do for each task.

Prior to candidates starting the assignment, you must download the following electronic files for their use. You must keep these files secure and candidates must not access them prior to assessment.

♦ data sheet 2a — graphic of logo ♦ data sheet 2b — images 1 to 8

♦ data sheet 2c — images 9 to 17

This assignment has three tasks, all of which are mandatory. Candidates must complete the tasks in order.

Each task has a notional time allocated to it. This is not mandatory and is an indication of how long candidates should spend on the task.

Task 1 — 16 marks: producing production drawings for a handheld gaming device (suggested time 3 hours)

- ♦ Task 1: candidates must produce their production drawings electronically and generate them from a 3D CAD model.

Task 2 — 12 marks: producing promotional and preliminary graphics for a handheld gaming device (suggested time 3 hours)

- ♦ Task 2a: candidates must complete this electronically.
- ♦ Task 2b: candidates can complete this manually or electronically.
- ♦ Task 2c: candidates must complete this electronically.
- ♦ Task 2c: candidates must identify where they have used three design elements and principles from the list in the task.
- ♦ Task 2c: candidates must identify where they have used **flow text along a path.**

Task 3 — 12 marks: producing preliminary graphics for a gaming device charger (suggested time 2 hours)

- ♦ Tasks 3a and 3b: candidates should complete these manually. If they use an electronic method, it **must not** be 3D CAD software, as they will gain no marks.
- ♦ Tasks 3a and 3b: if candidates use electronic sketching software, they are only permitted to use a straight edge. They **must not** use any other tools.
- ♦ Tasks 3a and 3b: candidates **must not** use drawing boards and set squares.
- ♦ Tasks 3a and 3b: candidates will gain no marks if there is evidence they have used drawing instruments other than a straight edge.

Note: candidates must not trace drawings for any part of the assignment. They will gain no marks for traced drawings.

All electronically generated evidence must be printed and compiled for uplift by Qualifications Scotland.

Instructions for candidates

This assessment applies to the assignment for National 5 Graphic Communication.

This assignment has 40 marks out of a total of 120 marks available for the course assessment.

It assesses the following skills, knowledge and understanding:

- demonstrating graphic design skills and creativity
- using graphic communication technologies
- producing preliminary, production and promotional graphic items in response to a situation or problem
- using illustration techniques to create graphics with relevant visual impact
- producing 2D and 3D production drawings, applying appropriate standards, protocols and conventions (drawing includes manual or electronic production methodologies)
- reviewing and evaluating your progress, giving justification for your choice of graphic items and the graphic communication techniques employed

This is a closed-booked assessment. Your teacher or lecturer will let you know if there are any specific conditions for doing this assessment.

Read each task fully before starting.

Note: you must not trace drawings for any part of the assignment. You will gain no marks for traced drawings.

In this assessment, you have to:

- produce a range of graphics in response to a series of tasks, which will test aspects of the skills and knowledge listed above
- complete all of the tasks in the order presented

You have 8 hours to complete the assignment, excluding the time required to set up and clear away any equipment you need, and for any printing that is required.

You must not use any text, images, or other items from any other source unless you created them during this 8-hour assignment.

The assignment has three tasks, with marks allocated as follows:

Task 1 — 16 marks: producing production drawings for a handheld gaming device (suggested time 3 hours)

Task 2 — 12 marks: producing promotional and preliminary graphics for a handheld gaming device (suggested time 3 hours)

Task 3 — 12 marks: producing preliminary graphics for gaming device charger (suggested time 2 hours)

(suggested time 2 hours)

Your teacher or lecturer will provide you with:

- ♦ task sheets 1 to 3
- ♦ data sheets 1a to 1f, 2a to 2c and 3a to 3d
- ♦ electronic files for task 2

Assessment conditions

This is a closed-book assessment. You must undertake the assignment under a high degree of supervision and control. This means:

- ♦ you must be within direct sight of your teacher or lecturer
- ♦ you must not interact with other candidates
- ♦ you must not have access to email, the internet and mobile phones
- ♦ you must complete your work independently — no group work is permitted

You have 8 hours to complete the assignment. Once you begin, you must continue in each subsequent class period until the permitted time allocation has been used up.

Reasonable assistance

You must progress through each stage of the assignment without intervention or guidance from your teacher or lecturer.

Once you have completed the assignment, your teacher or lecturer cannot return it to you for further work. They will not give you feedback on your assignment responses at any stage. They can give you reasonable assistance to support with the following aspects of your assignment:

- ♦ printing, collating, stapling and labelling your evidence to ensure it is in the format specified by Qualifications Scotland
- ♦ ensuring you have all the materials and equipment required to complete the assignment
- ♦ understanding the information in these instructions

Submitting your work

You must label each piece of evidence with the task number (for example task 1a), and the back of each page must be clearly labelled with your:

- ♦ name
- ♦ date of birth
- ♦ Scottish Candidate Number (SCN)
- ♦ centre name

Task 1: handheld gaming device

PocketVerse Games, an electronics company, is launching a new handheld gaming device.

Using the information on data sheets 1a to 1f, model and assemble the handheld gaming device components using 3D CAD software.

From these models, produce production drawings that will allow the handheld gaming device to be manufactured.

1a Produce suitable component orthographic views of the five components of the handheld gaming device.

Produce an elevation and a plan for the:

- button
- direction pad
- analogue stick

Produce these views to a scale of 5:1.

Produce an elevation, end elevation and a plan for the:

- screen
- dock

Produce these views to a scale of 1:1.

You must:

- use third-angle projection
- produce the elevation of each component in the same orientation as shown on the data sheets
- **show all** hidden detail
- **show all** centre lines
- include enough dimensions to allow for manufacture
- include annotations

(8 marks)

1b Produce an elevation, plan and two sectional end elevations of the assembled handheld gaming device.

The sectional end elevations **must** cut through the vertical centres of the two analogue sticks. The positions of the cutting planes for these sectional views are shown on data sheet 1f.

You must:

- produce the views at a scale of 1:2
- produce the elevation in the same orientation as data sheet 1f
- use third-angle projection
- **not** show hidden detail
- **not** show centre lines
- produce the views as line drawings

(4 marks)

1c Produce an exploded isometric view of the handheld gaming device.

You must:

- produce the view as a line drawing
- produce the view in the same orientation as the pictorial view on data sheet 1a
- **not** show hidden detail
- **not** render the view

(2 marks)

1d Include correct British Standard conventions and line types on all of your drawings.

(2 marks)

Note: you must create the production drawings for task 1 electronically and print them out.

You should complete task 1 on a maximum of four single-sided A3-sized pages.

You should spend approximately 3 hours on task 1.

Your completed assignment (tasks 1 to 3) should be on no more than eight single-sided A3-sized pages.

Task 2: handheld gaming device

PocketVerse Games would like you to produce a CAD-rendered illustration of their handheld gaming device and design a promotional graphic for a digital display advert.

Your teacher or lecturer will give you electronic files of the graphics from data sheets 2a to 2c.

You must:

- use the logo on data sheet 2a — you can use the logo as it is, or you can edit the colour to suit your design
- use the company name on data sheet 2a
- use at least **one** of the images on data sheets 2b and 2c — you can use the images as they are, or you can edit them to suit your design
- **not use** any text or images from any other sources such as the internet — if you do this, you will gain 0 marks for task 2c

2a Produce a CAD-rendered pictorial illustration of the assembled handheld gaming device you modelled in task 1, complete with appropriate materials, highlights and shadows.

You **must** use the following materials when producing your CAD render:

- button — plastic
- direction pad — plastic
- screen — white plastic
- analogue stick — plastic
- dock — plastic

When applying these materials, you can use any colour except grey. The screen must be white.

(1 mark)

2b Produce two preliminary layouts/thumbnails of the handheld gaming device digital display advert.

You can use a manual or electronic method to complete this task.

Produce your layouts/thumbnails in portrait orientation, similar to the proportions shown on data sheet 2a.

Your layouts/thumbnails must contain:

- the company logo from data sheet 2a
- the company name from data sheet 2a
- at least **one** piece of the extended text from data sheet 2a
- at least **one** of the images from data sheet 2b or data sheet 2c

Annotate your graphic layout, identifying where you have used the logo, the company name, the extended text and the image(s).

(1 mark)

2c Produce a final version of a promotional graphic layout for the handheld gaming device digital display advert.

You can use the CAD-rendered pictorial illustration of the assembled handheld gaming device you produced in task 2a.

PocketVerse Games has specified the graphic layout must:

- be produced to the dimensions and orientation from data sheet 2a
- have high-quality visual impact
- make effective use of the company logo from data sheet 2a
- make effective use of the company name from data sheet 2a
- use at least **one** piece of the extended text from data sheet 2a
- make effective use of at least **one** image from data sheet 2b or data sheet 2c
- use only the images supplied by the company (see data sheet 2b and data sheet 2c)

You **must** make effective use of at least **three** of the following design elements and principles in your graphic layout.

- alignment
- depth
- contrast
- unity
- dominance
- line
- use of colour (warm, cool, contrast, harmony, advancing, receding, mood)

You **must** also include effective use of **flow text along a path** in your graphic layout.

You **must** annotate your graphic layout:

- **Identify** where you have used **three** of the design elements and principles in your graphic layout. You do not need to describe the effect of the design elements and principles on your layout.
- **Identify** where you have used **flow text along a path** in your graphic layout.

(10 marks)

Note: you should complete task 2 on a maximum of two single-sided A3-sized pages.

You should spend approximately 3 hours on task 2.

Your completed assignment (tasks 1 to 3) should be on no more than eight singled-sided A3-sized pages.

Task 3: gaming device charger

PocketVerse has developed a gaming device charger for their handheld gaming device.

Using the drawings from data sheets 3a to 3d, produce preliminary sketches for the gaming device charger.

Task 3 assesses your sketching skills. **Do not** use a drawing board or a set square. If you measure, trace or use any drawing instruments other than a straight edge, you will gain 0 marks for this task. In task 3b, you **must not** trace drawings from the data sheets.

You should complete this task manually. If you use an electronic method, it must not be 3D CAD software. If you use electronic sketching software, you are only allowed to use a straight edge. No other tools are allowed.

3a Produce preliminary orthographic sketches of the gaming device charger components.

Produce an elevation, end elevation and a plan for the:

- stand — **do not show** hidden detail
- rest — **show all** hidden detail
- base — **show all** hidden detail

You do not need to show any dimensions on your sketches.

You **must**:

- ensure you sketch the elevation of each of the gaming device charger components in the direction shown on data sheets 3b to 3d
- use third-angle projection

(6 marks)

3b Produce a rendered pictorial sketch of the assembled gaming device charger, showing appropriate highlights, shadows and materials.

You **must** use the following materials for the components of the gaming device charger in your sketch:

- stand — plastic
- rest — plastic
- base — wood

Do not show hidden detail.

Do not include the handheld gaming device as part of your sketch.

(6 marks)

Note: you should complete task 3 on a maximum of two single-sided A3-sized pages.

You should spend approximately 2 hours on task 3.

Your completed assignment (tasks 1 to 3) should be on no more than eight single-sided A3-sized pages.

Data sheet 1a

Pictorial views

An image has been added to the screen to make the render look realistic. You are not expected to add an image to the screen in task 2a.

RENDERED VIEW

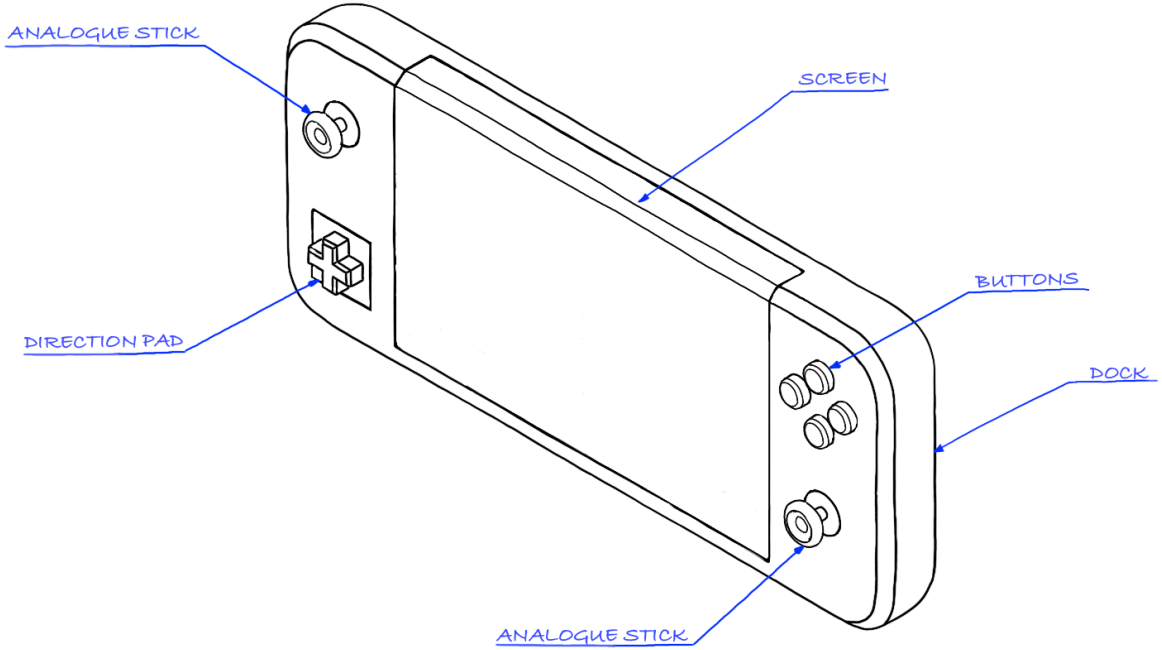

PICTORIAL VIEW

Data sheet 1b

Button

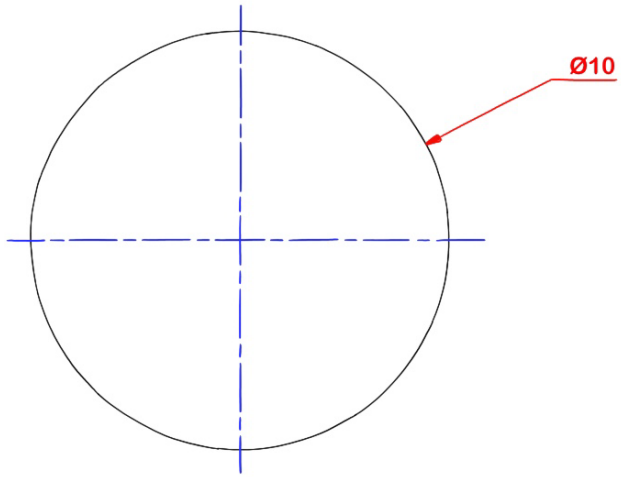

PLAN

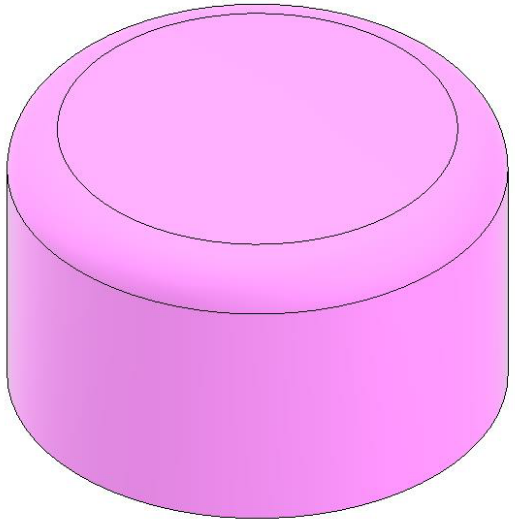

PICTORIAL VIEW

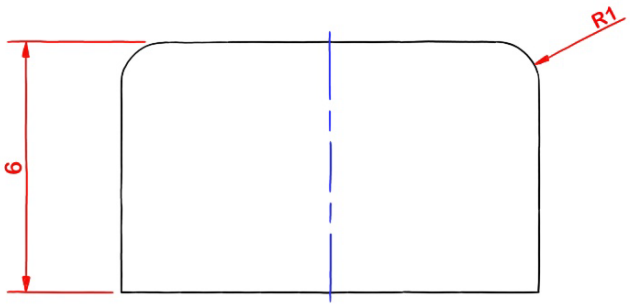

ELEVATION

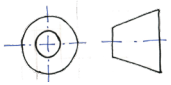

Data sheet 1c

Direction pad

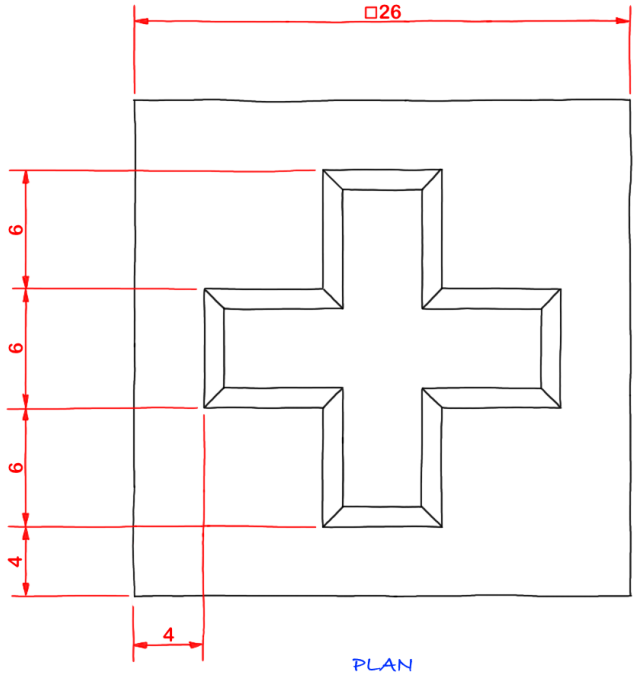

PLAN

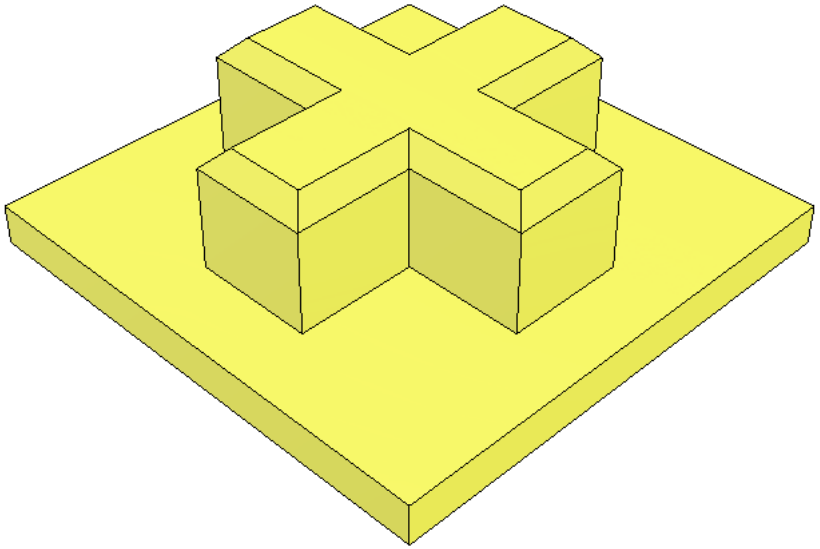

PICTORIAL VIEW

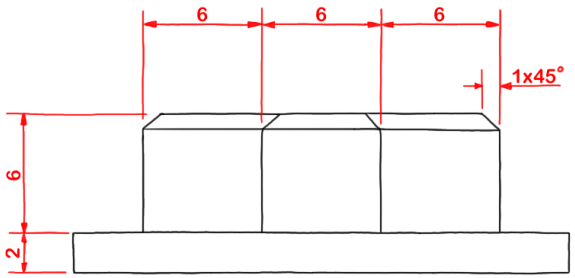

ELEVATION

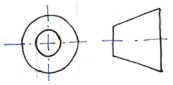

Data sheet 1d

Screen

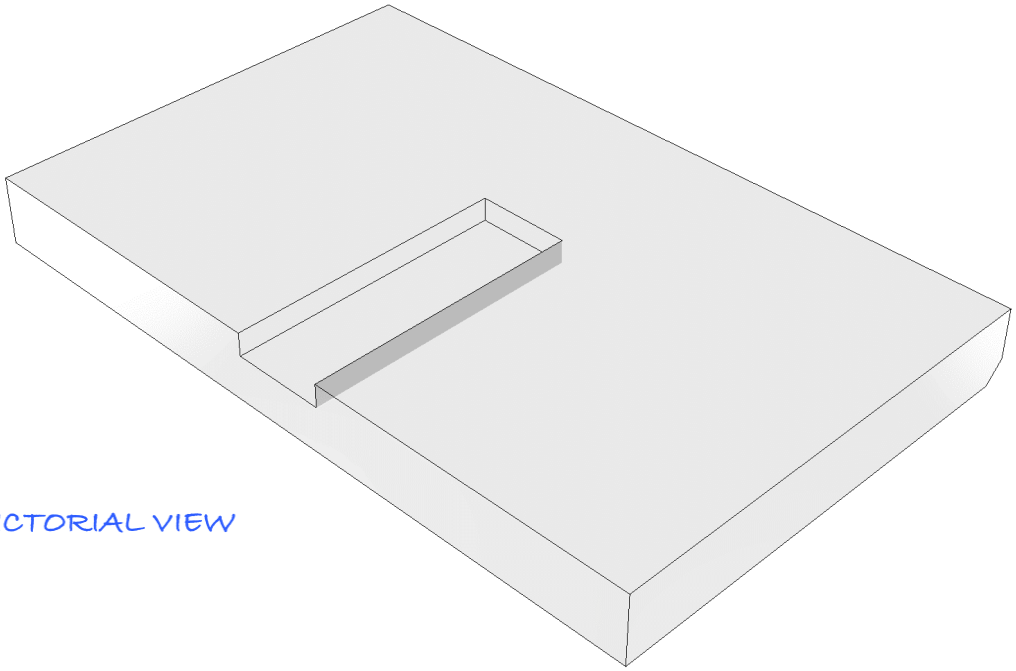

PICTORIAL VIEW

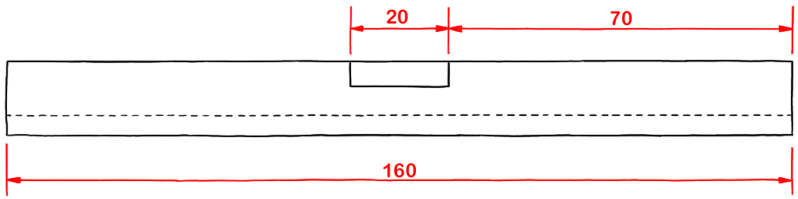

ELEVATION

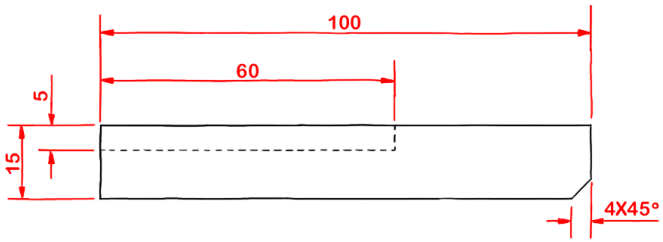

END ELEVATION

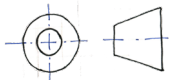

Data sheet 1e

Analogue stick

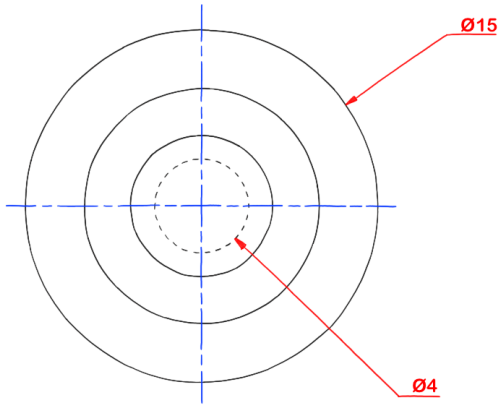

PLAN

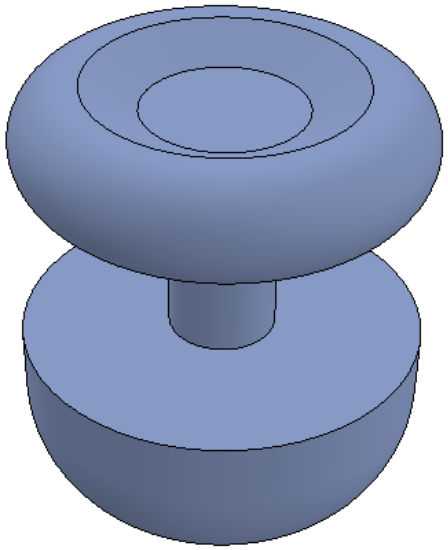

PICTORIAL VIEW

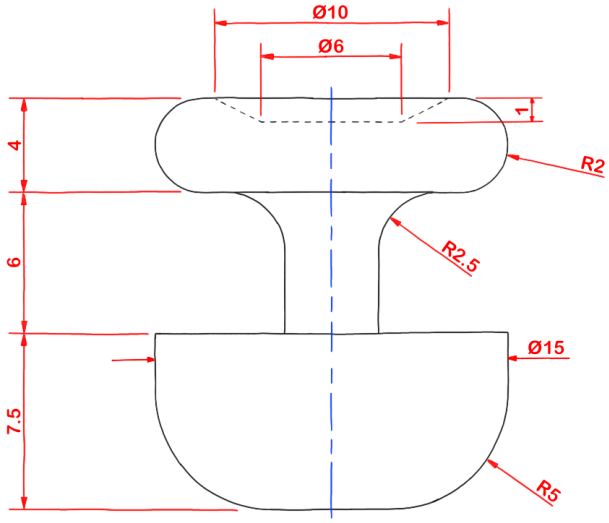

ELEVATION

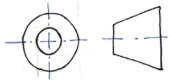

Data sheet 1f

Dock

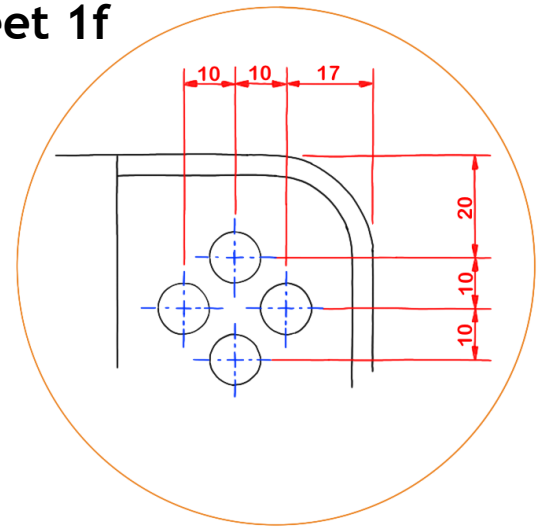

DETAIL VIEW A

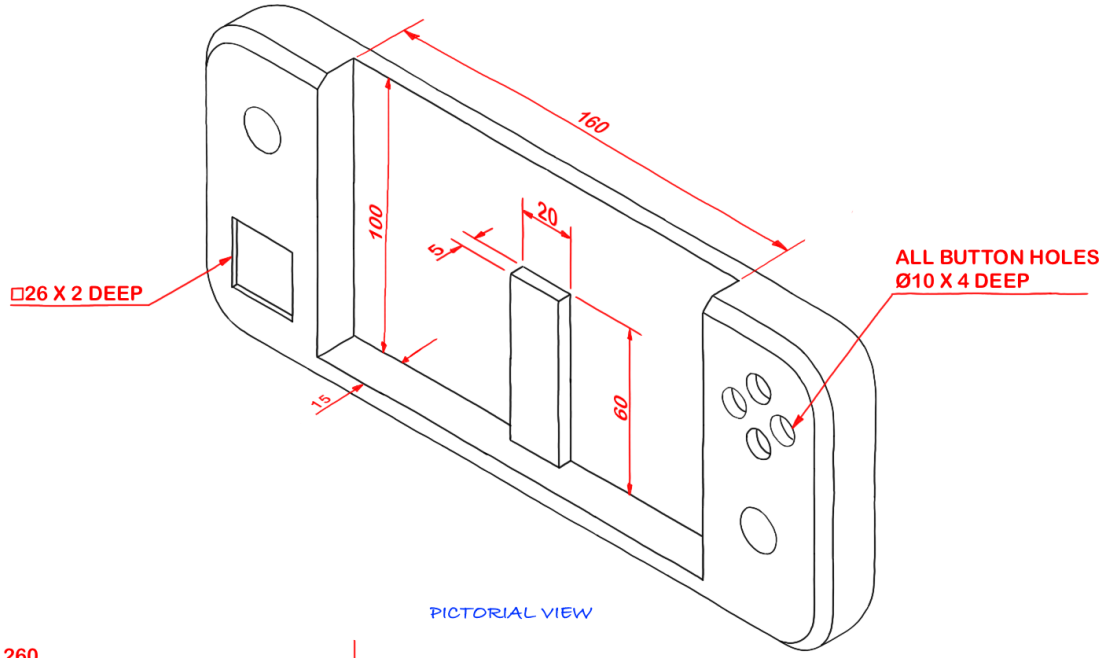

PICTORIAL VIEW

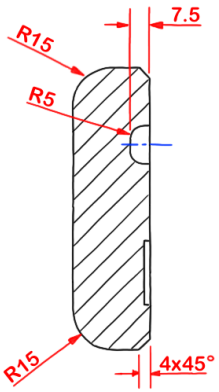

SECTIONAL END ELEVATION
A-A

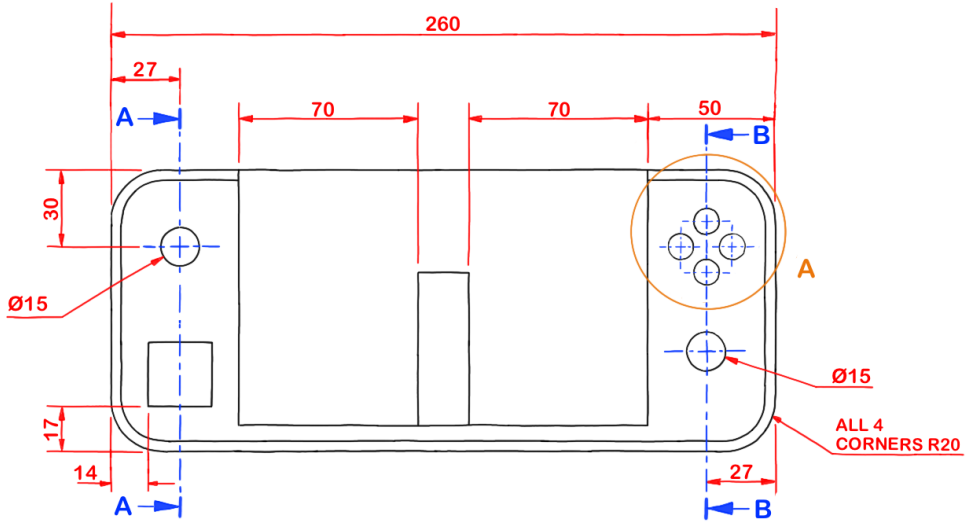

ELEVATION

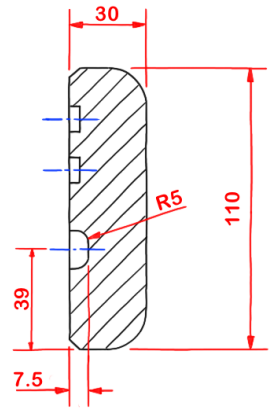

SECTIONAL END ELEVATION
B-B

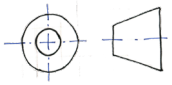

Data sheet 2a

Your promotional graphic should have the dimensions 270 mm x 150 mm.

Produce the graphic layout in portrait orientation, as shown.

Logo

Company name:

PocketVerse

Company font: ERAS BOLD ITC

You **must** use at least **one** piece of this extended text. You may use this in any format you like — it does not have to be a list.

Legendary games, legendary moments

Step into a new reality

Beyond the screen, into the adventure

Digital display advert

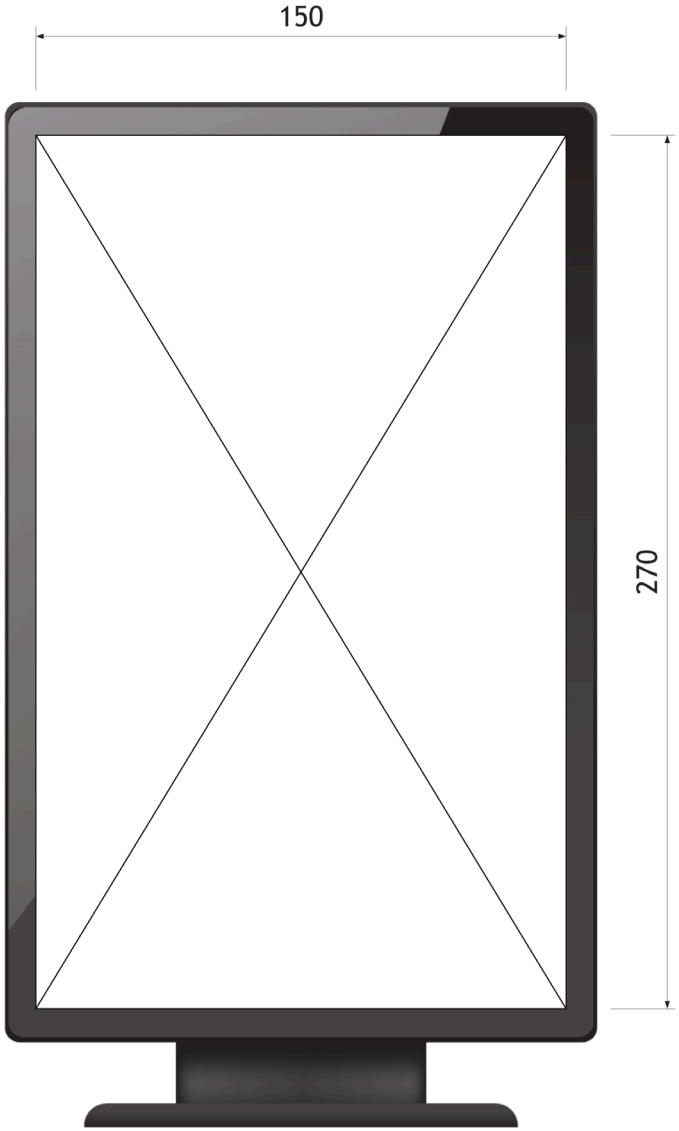

Data sheet 2b

Image 1

Image 2

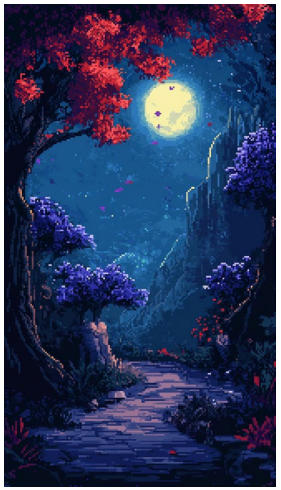

Image 3

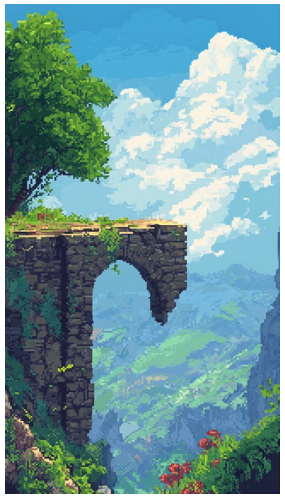

Image 4

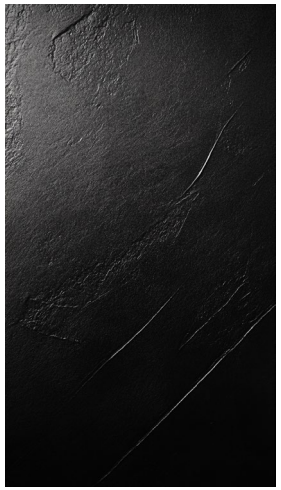

Image 5

Image 6

Image 7

Image 8

Data sheet 2c

Image 9

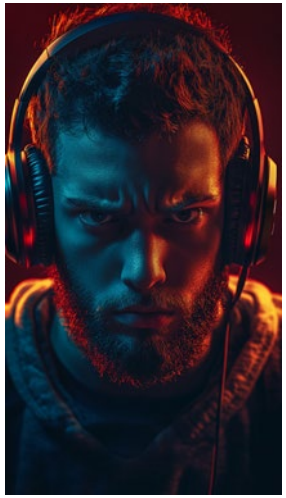

Image 10

Image 11

Image 12

Image 13

Image 14

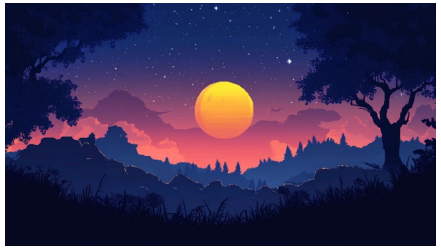

Image 15

Image 16

Image 17

Data sheet 3a

Rendered views of gaming device charger and exploded pictorial view

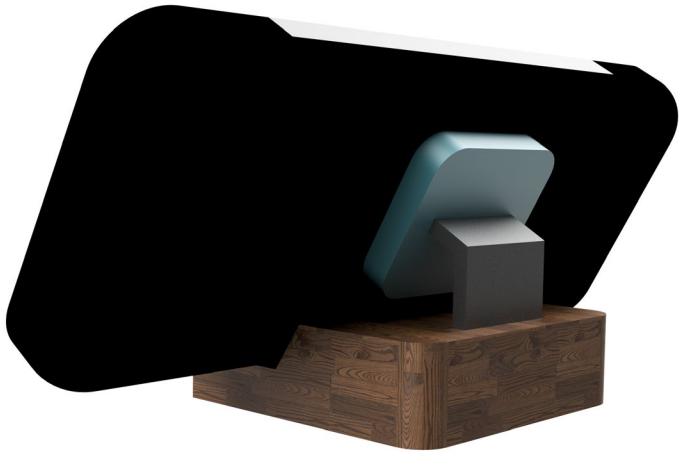

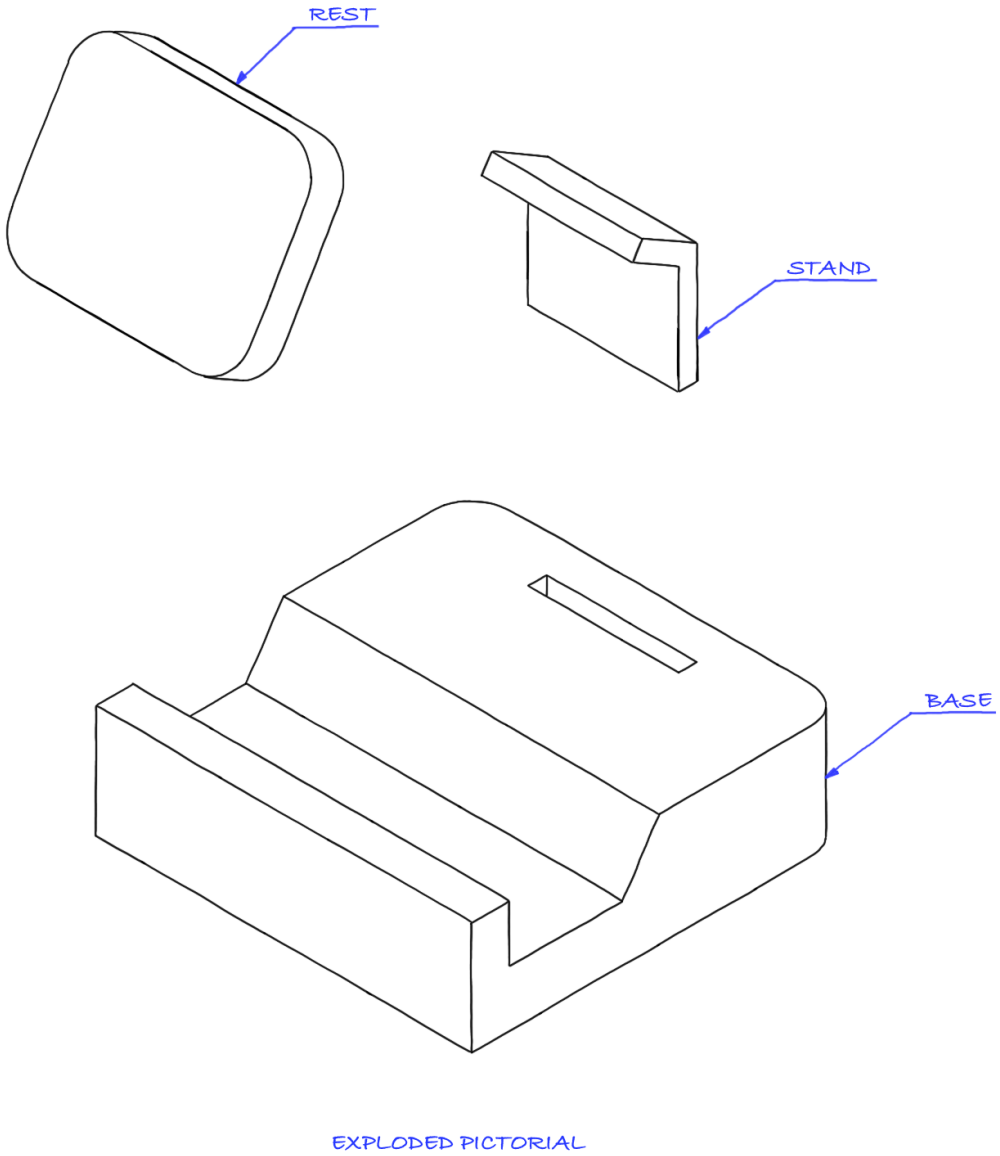

Data sheet 3b

Stand

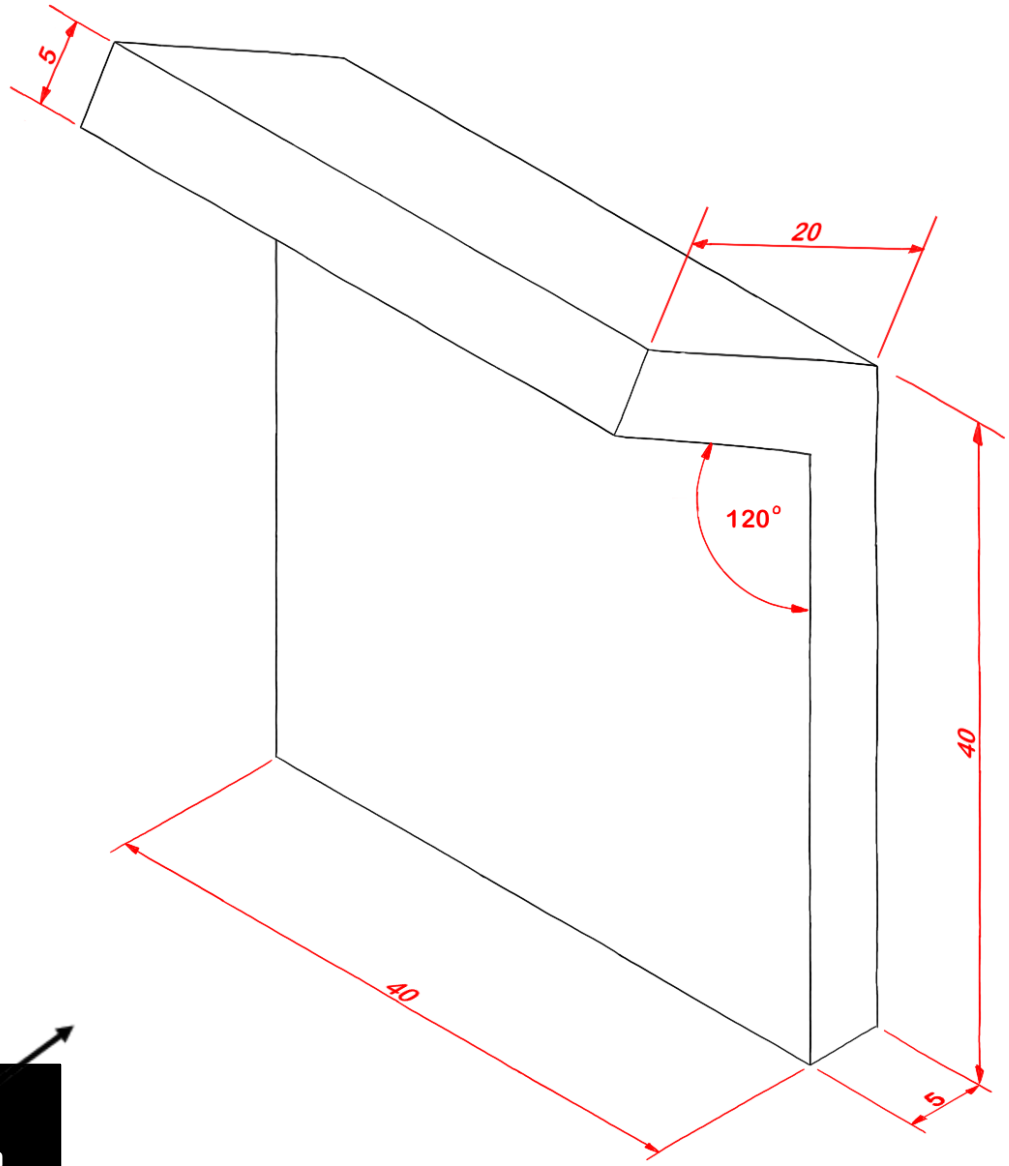

PICTORIAL VIEW

Task 3a

Elevation

Data sheet 3c

Rest

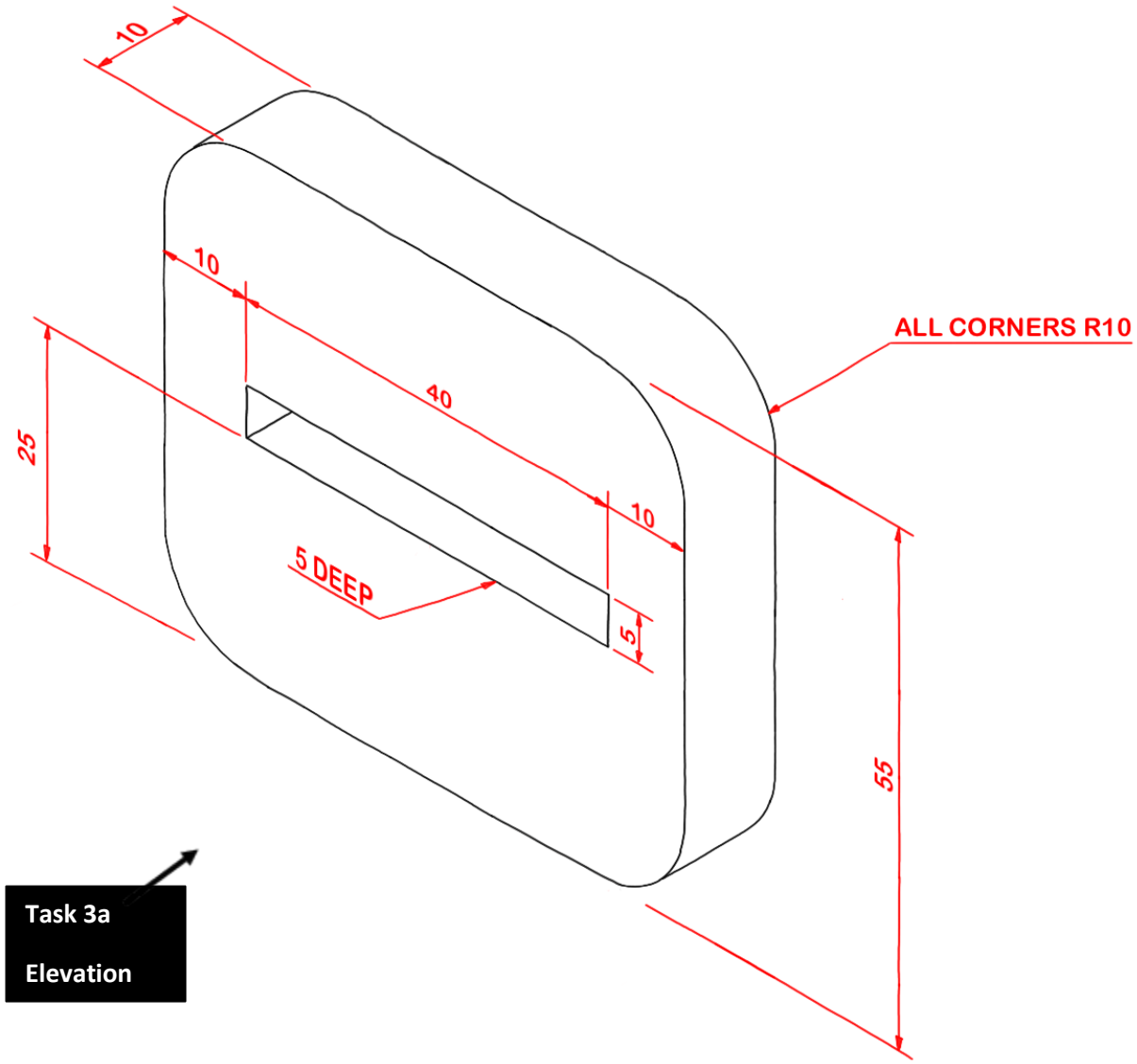

PICTORIAL VIEW

Data sheet 3d

Base

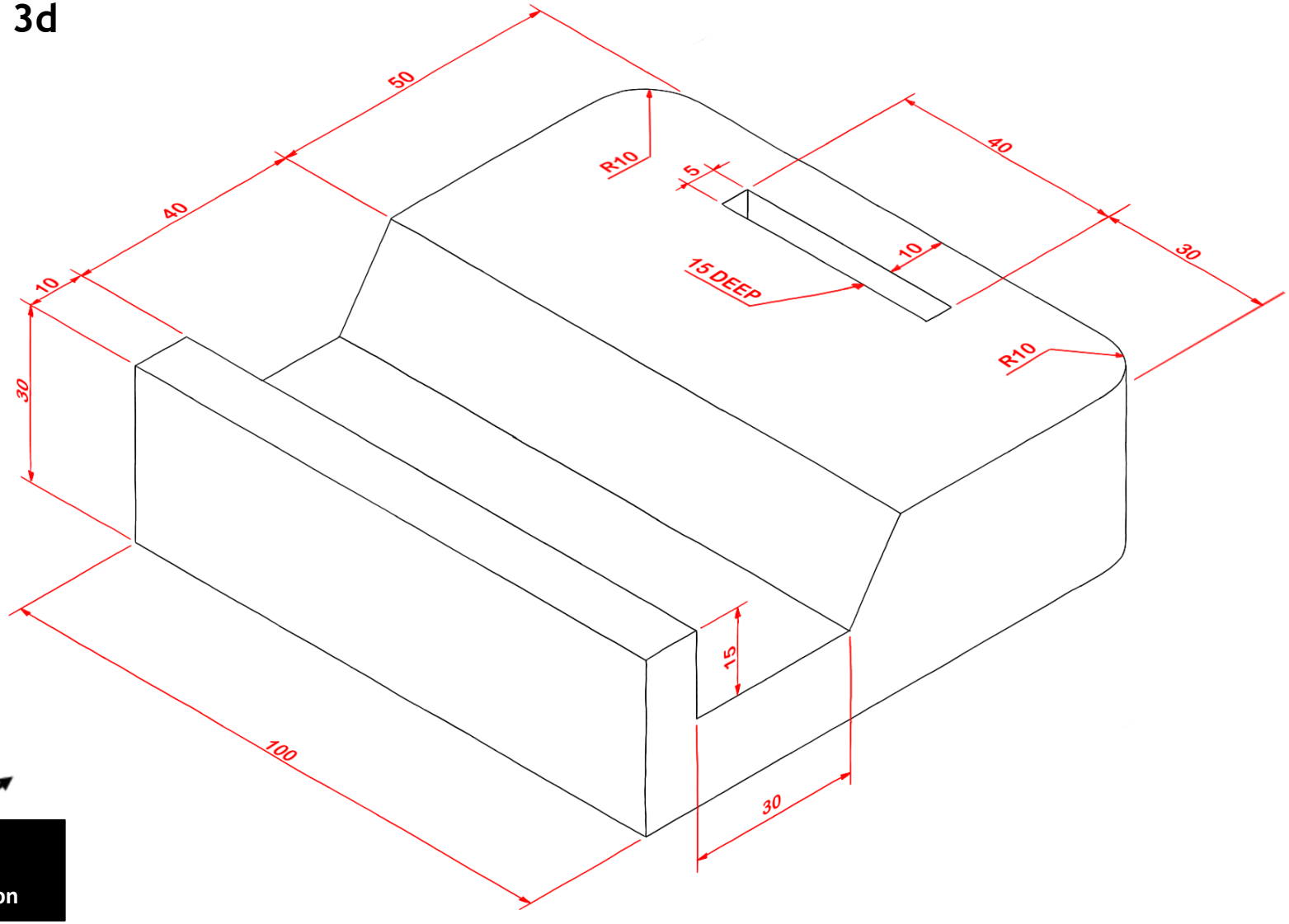

Task 3a

Elevation

PICTORIAL VIEW

Image descriptions

Image 1: pastel light in a forest

Image 2: dark mythical forest

Image 3: colourful cliff edge

Image 4: dark texture

Image 5: cityscape

Image 6: destroyed city

Image 7: above the clouds

Image 8: sunset on street

Image 9: intense male gamer

Image 10: intense female gamer

Image 11: side-on male silhouette

Image 12: side-on female silhouette

Image 13: stone texture

Image 14: moonrise over a dark horizon

Image 15: gaming headphones

Image 16: neon shapes

Image 17: console render with logo

Copyright acknowledgements

Pages 15 and 24: image of digital display — freepik.com

Administrative information

Published: January 2026 (version 1.0)

History of changes

Version	Description of change	Date

Security and confidentiality

This document can be used by Qualifications Scotland approved centres for the assessment of National Courses and not for any other purpose.

This document may only be downloaded from Qualifications Scotland's designated secure website by authorised personnel.

© Qualifications Scotland 2026